INSTALLATION INSTRUCTION
SIDE LADDER FITS FOR LC250 / LEXUS GX550



INFORMATION

The information in these installation instructions is intended for use only by skilled technicians who have the proper tools, equipment, and training to correctly and safely install equipment in your vehicle. These procedures should not be attempted by individuals without professional expertise or by "do-it-yourselfers."

WARNING ⚠

It is critical that all products are properly and securely assembled and attached to your vehicle. Improper attachment could result in an automobile accident, causing serious bodily injury or death. You are responsible for assembling and securing all components to your vehicle, checking the attachments prior to use, and periodically inspecting the products for adjustment, wear, and damage.
Therefore, you must read and understand all instructions and precautions supplied with your product prior to installation or use. If you do not understand all instructions and cautions, or if you lack mechanical experience and are not thoroughly familiar with the installation procedures, you should have the product installed by a professional installer or other qualified personnel.

NOTE: We will not be responsible for any damage caused by the failure to install the product according to these instructions. If you have any questions about the installation of this product, please contact us for assistance.

1 PARTS LIST

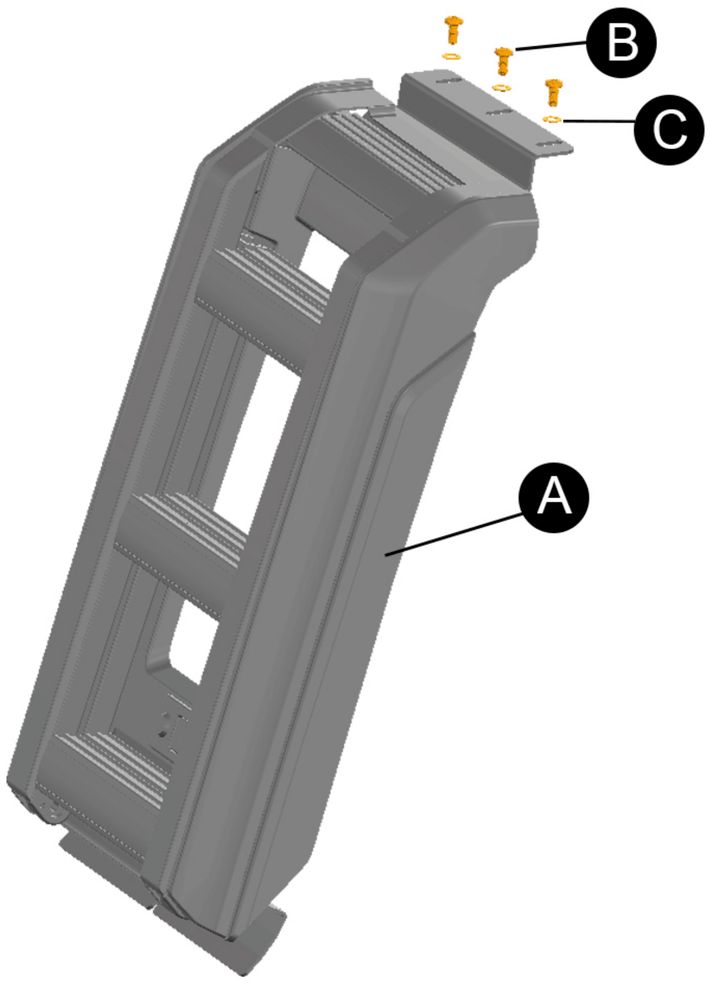

	QTY	NAME
A	x 1	Side Ladder
B	x 3	M8*16 Pan Head Torx Screws
C	x 3	8x14 Gaskets
D	x 1	T45 Wrench
E	x 2	Adhesive Promoter

2 INSTALLATION STEPS

Figure 2.1

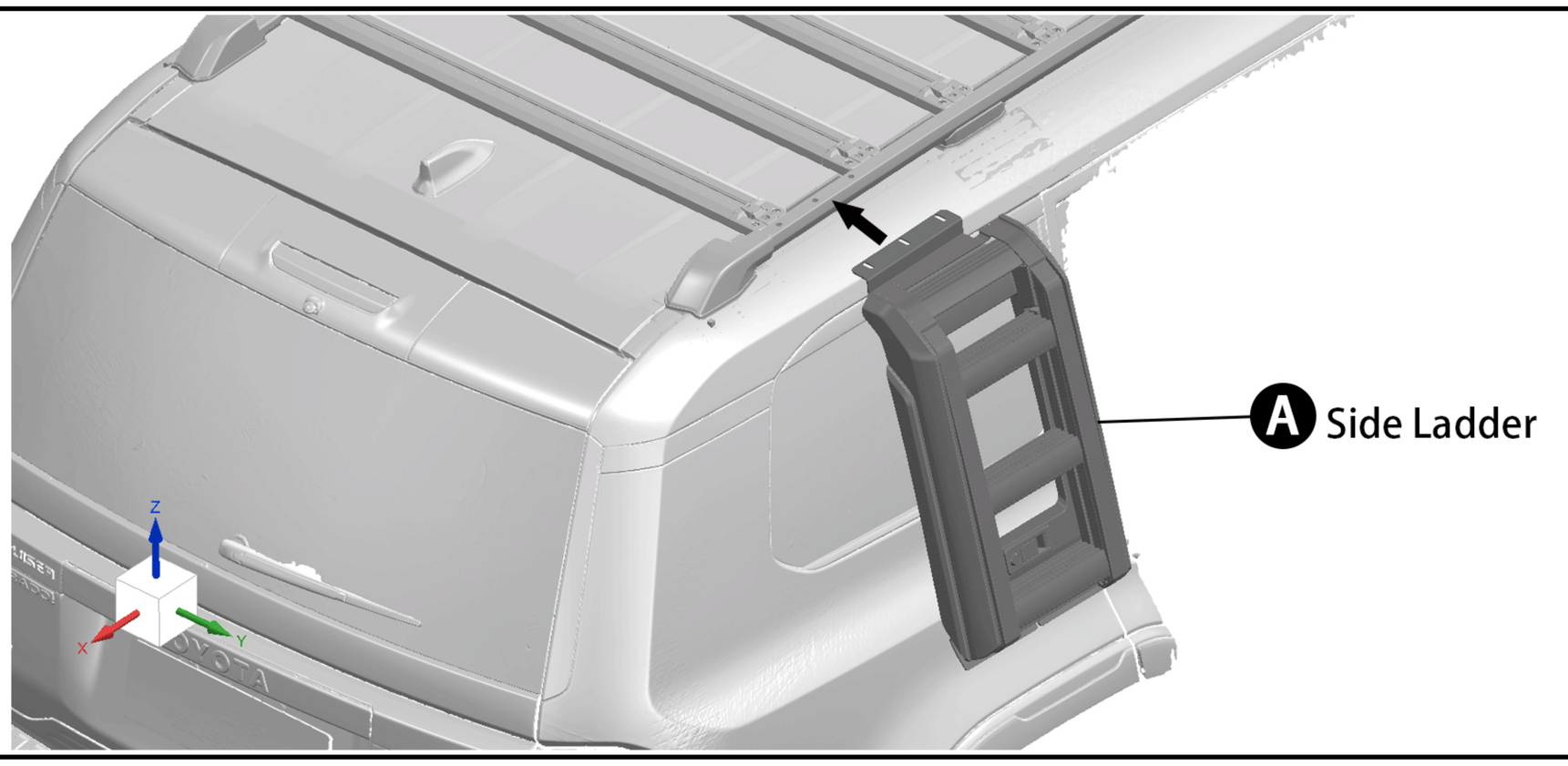

Place the Side Ladder (A) onto the luggage platform, ensuring the mounting holes are aligned properly.

Figure 2.2

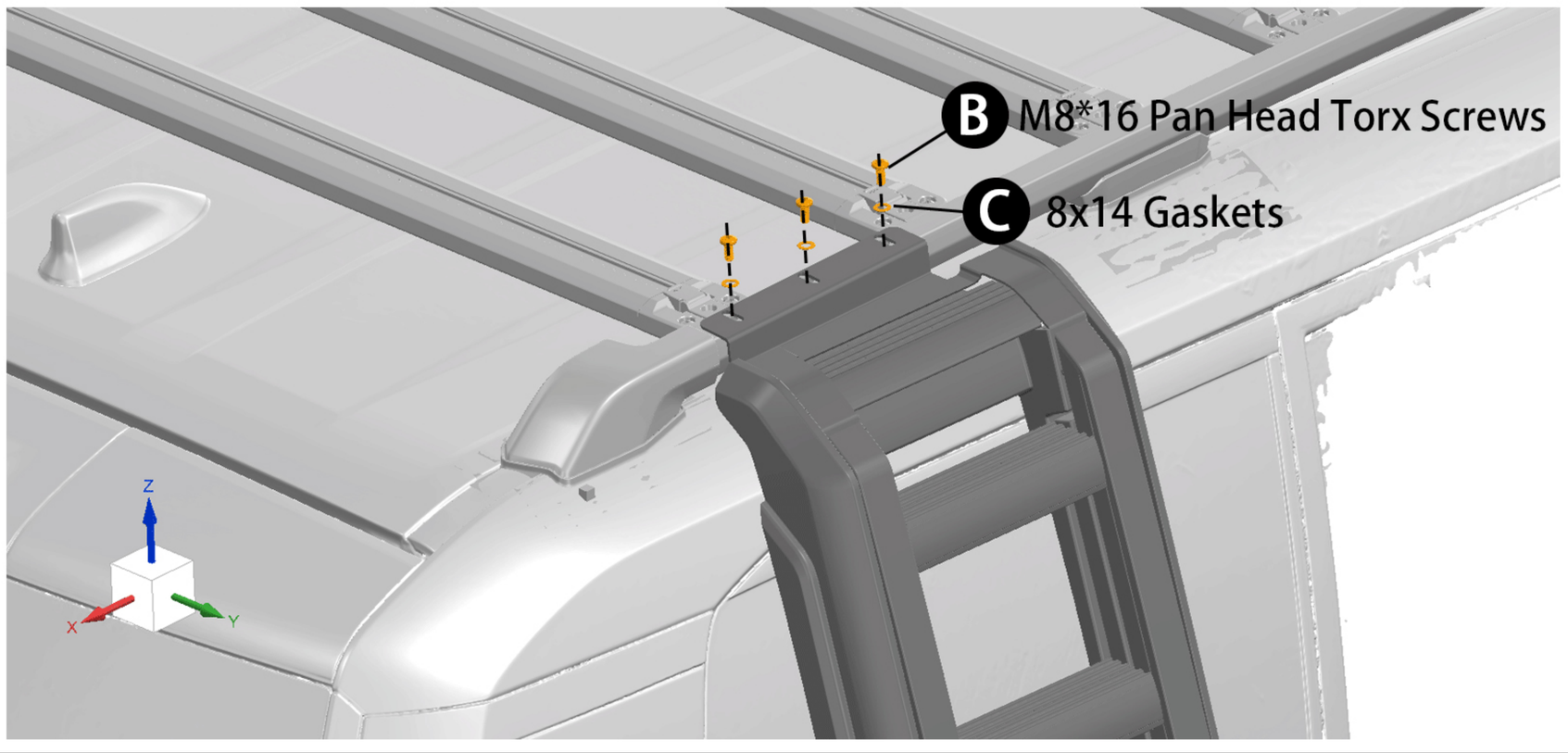

Use the M8*16 Pan Head Torx Screws (B) and 8x14 Gaskets (C) to secure the side ladder. Ensure all connection points are firmly tightened.

Figure 3.1

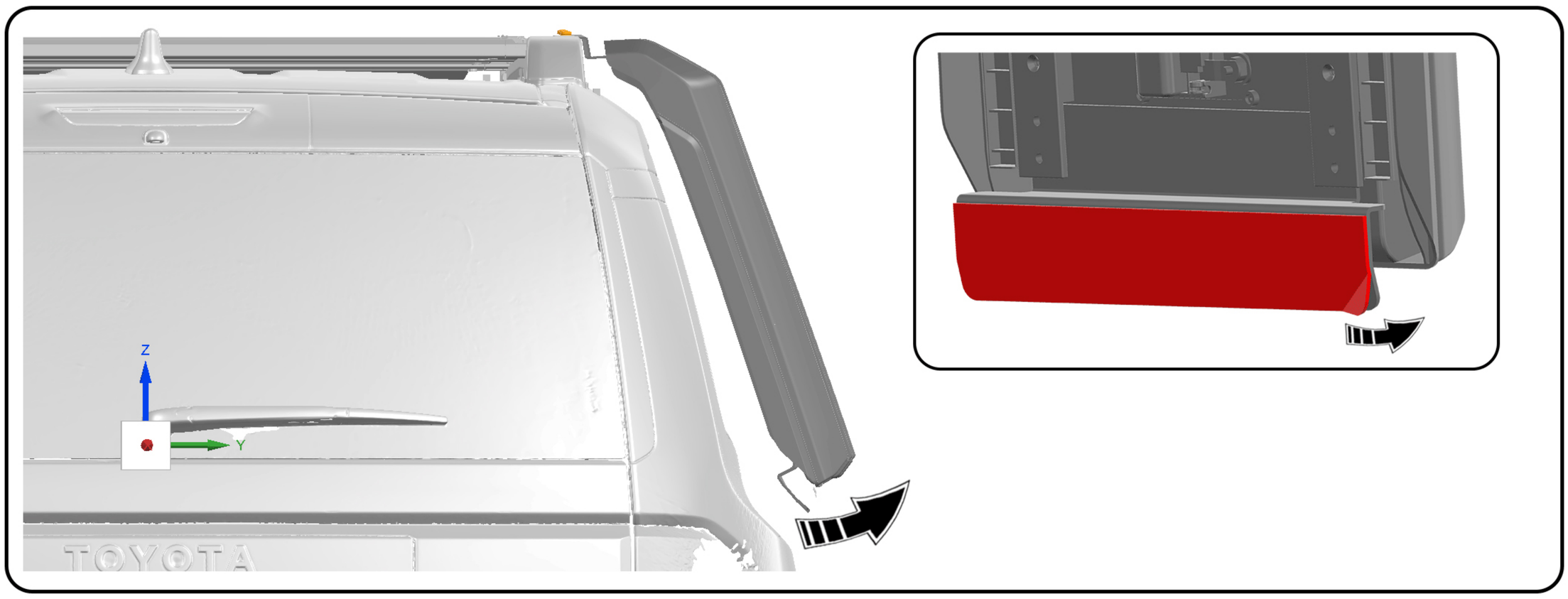

Hold the bottom of the Side Ladder (A) and gently pull it outward by a small distance.
Peel off the protective film from the adhesive backing on the ladder.
Slowly attach the ladder to the vehicle body and press firmly to ensure proper adhesion.
Ensure the ladder does not interfere with the fuel tank cap operation.

Figure 3.2

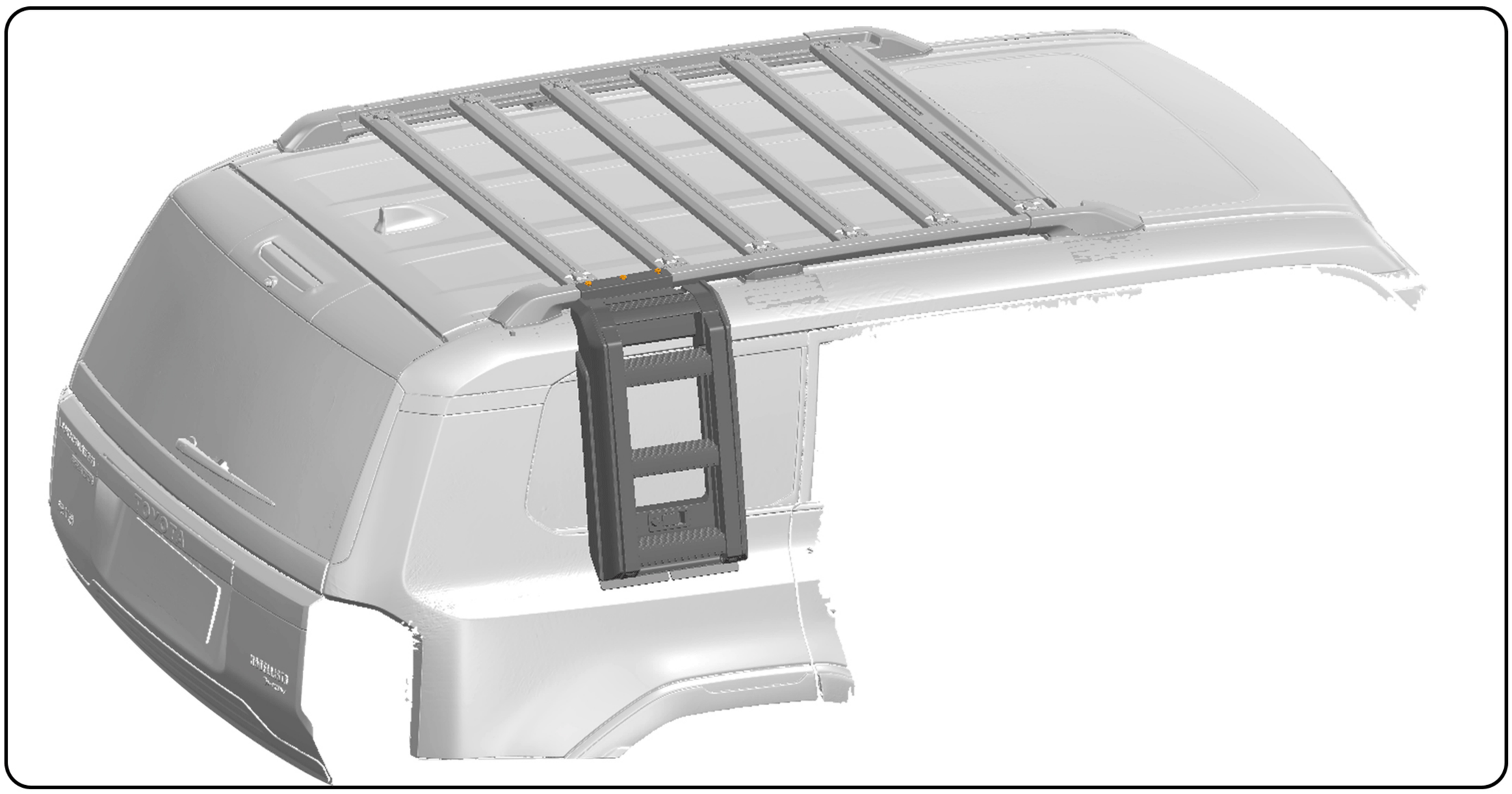

Verify that the Side Ladder (A) is securely connected to the platform and vehicle body.
The installation is now complete.

Notes:

- Ensure all screws and gaskets are securely tightened to prevent loosening during use.
- Before applying the adhesive backing, clean and dry the application area thoroughly.
- Regularly inspect the side ladder to ensure all components remain securely fastened and in good condition.