INSTALLATION INSTRUCTION
TRAILMASTER ROOF PLATFORM RACK
FOR LC250 / GX550

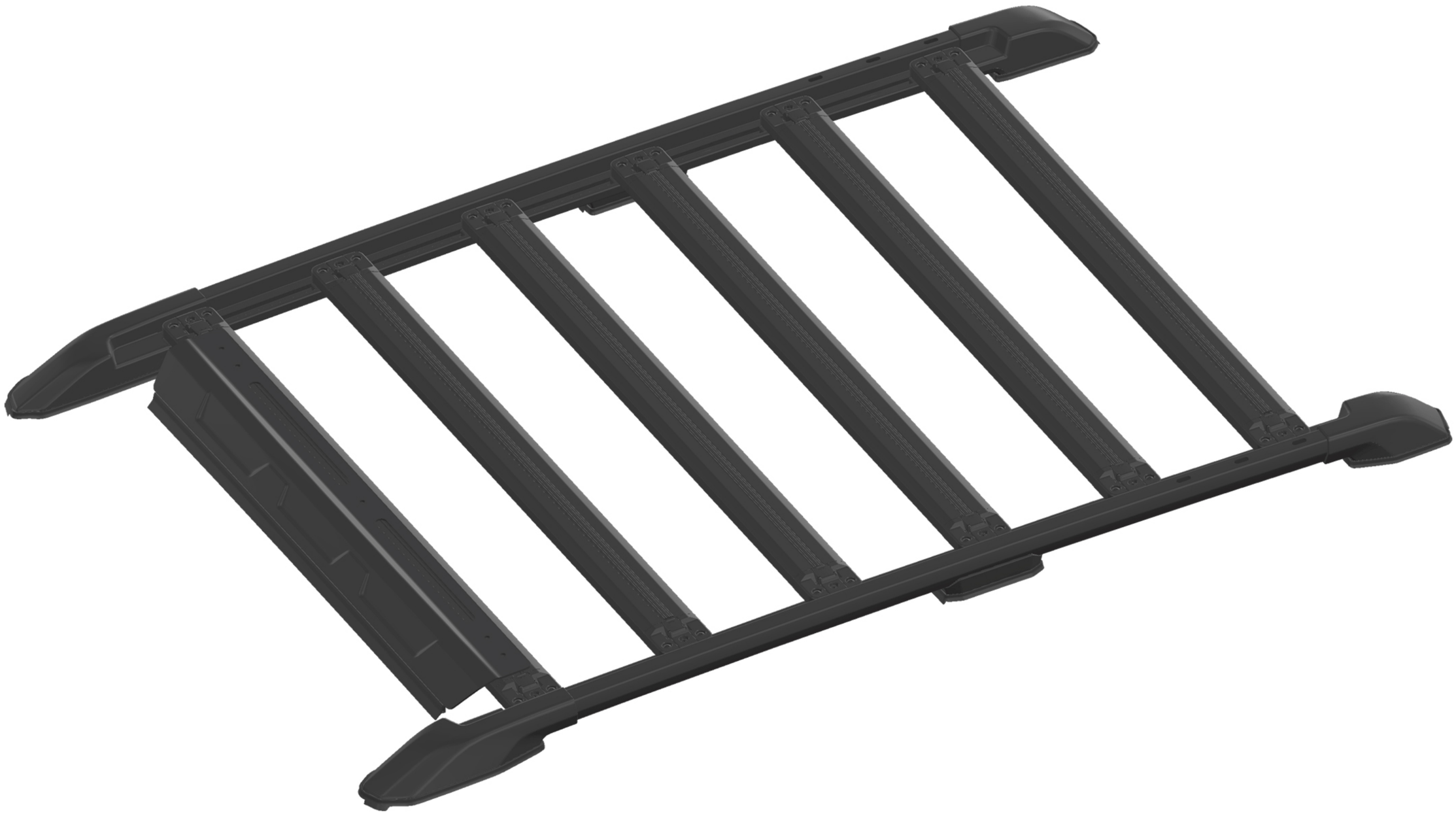

INFORMATION

The information in these installation instructions is intended for use only by skilled technicians who have the proper tools, equipment, and training to correctly and safely install equipment in your vehicle. These procedures should not be attempted by individuals without professional expertise or by "do-it-yourselfers."

WARNING ⚠

It is critical that all products are properly and securely assembled and attached to your vehicle. Improper attachment could result in an automobile accident, causing serious bodily injury or death. You are responsible for assembling and securing all components to your vehicle, checking the attachments prior to use, and periodically inspecting the products for adjustment, wear, and damage.
Therefore, you must read and understand all instructions and precautions supplied with your product prior to installation or use. If you do not understand all instructions and cautions, or if you lack mechanical experience and are not thoroughly familiar with the installation procedures, you should have the product installed by a professional installer or other qualified personnel.

NOTE: We will not be responsible for any damage caused by the failure to install the product according to these instructions. If you have any questions about the installation of this product, please contact us for assistance.

1 PARTS LIST

	QTY	NAME
A	x 2	Roof Rack (Left, Right)
B	x 6	Base (FL,FR,ML,MR,RL,RR)
C	x 12	M8x50 Hex Flange Screw
D	x 6	Rubber Pad (Front, Middle, Rear)
E	x 4	Cover (FL,FR,RL,RR)
F	x 1	Deflector Plate
G	x 1	Rubber Strip
H	x 5	M6 Sliding Nut
I	x 5	M6x14 Hex Screw

	QTY	NAME
J	x 5	M6 Washer
K	x 5	M6 Spring Washer
L	x 6	Crossbar
M	x12	Crossbar Mount Base
N	x 36	M6x25 Hex Screw
O	x 1	T30 Wrench
P	x 5	6mm Hex Socket Wrench
Q	x 1	Sealant
R	x 8	M8x16 Semi-Round Hex Screw

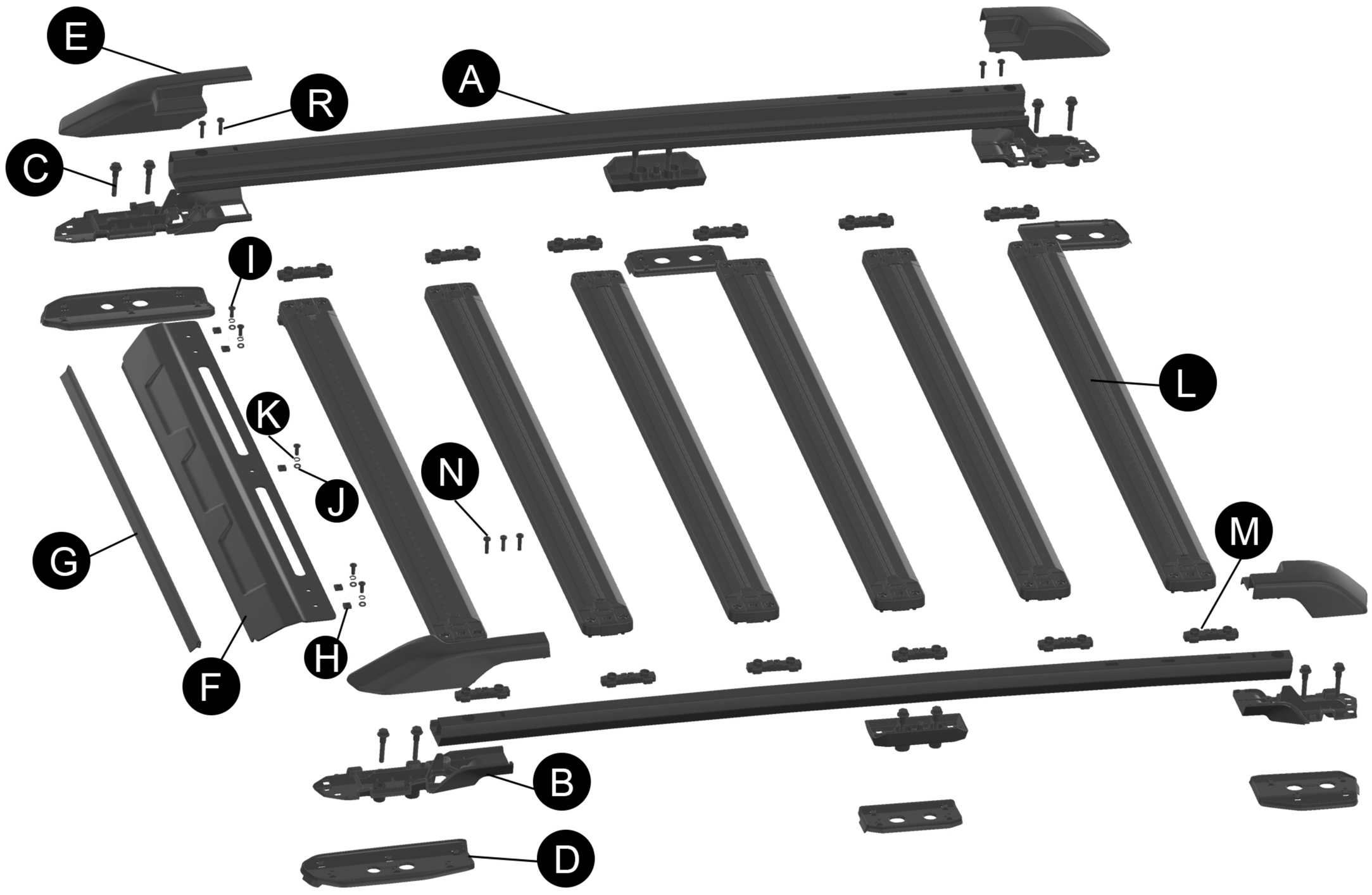

2 INSTALLATION STEPS

Figure 2.1

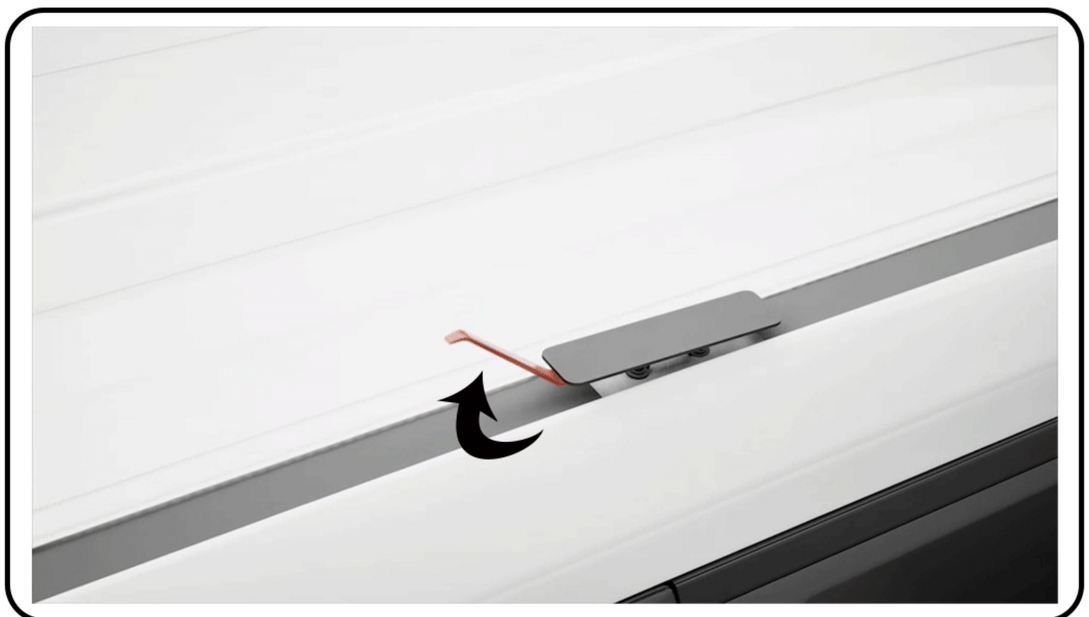

Remove the original middle roof cover from the vehicle.

Figure 2.2

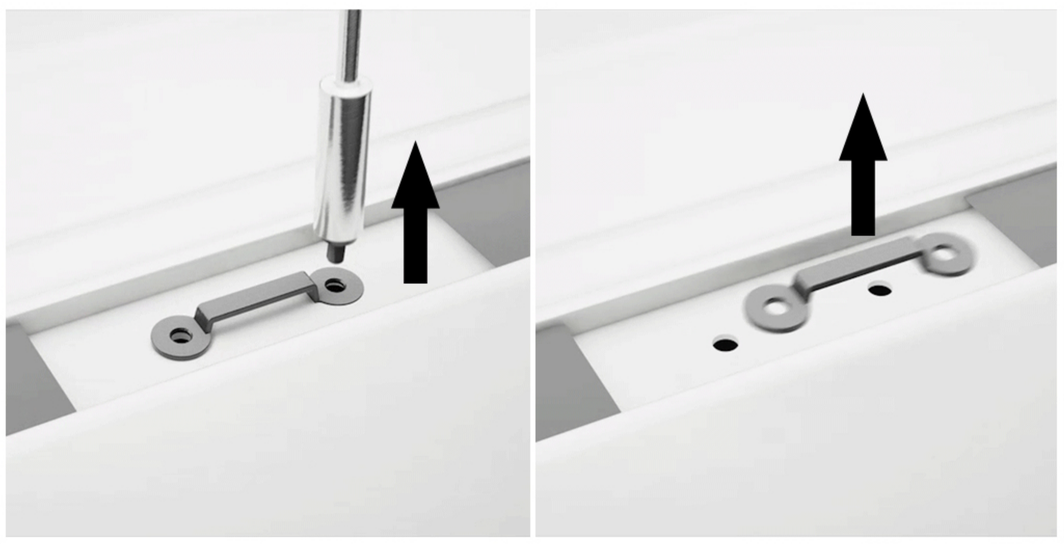

Unscrew the original screws and remove the factory-installed brackets.

Figure 2.3

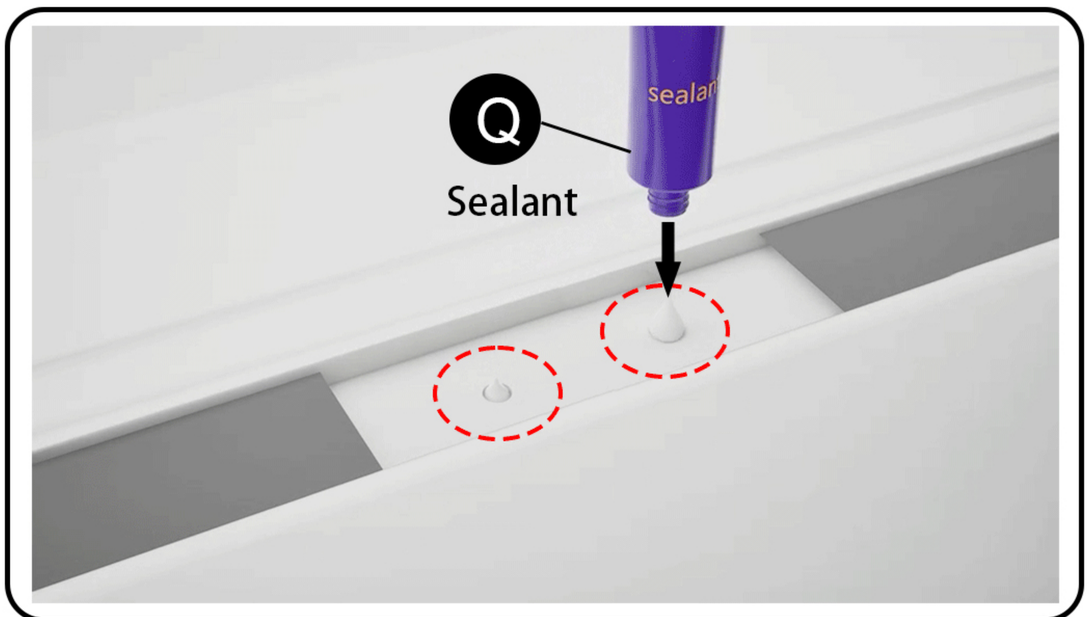

Apply sealant (Q) to the original mounting holes on the roof.

Figure 2.4

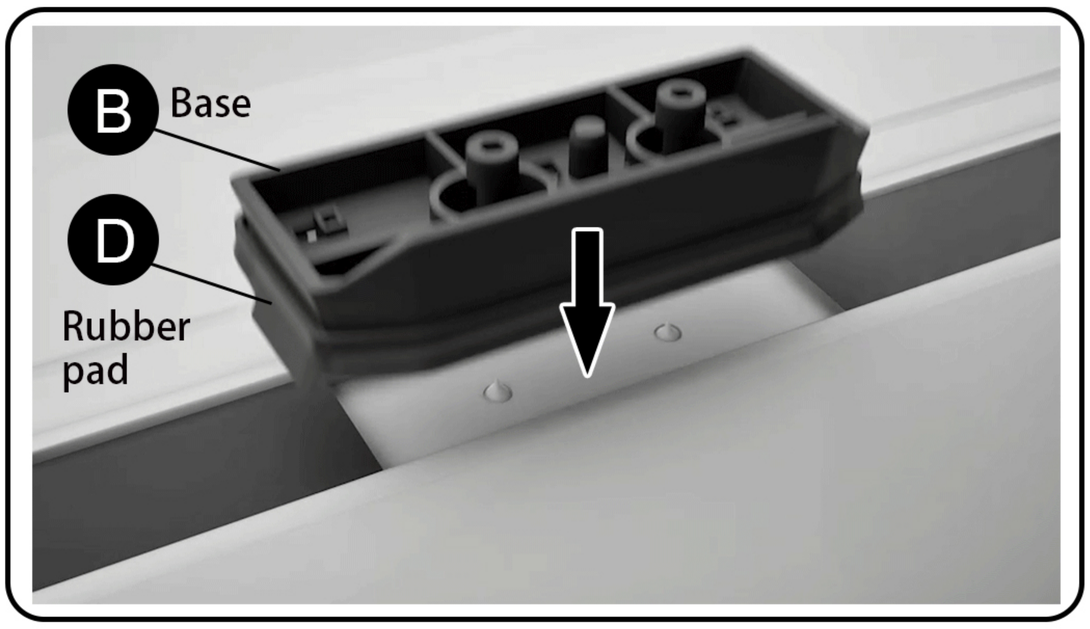

Assemble the middle base (B) with the rubber pad (D). Place the assembled part onto the roof and align with the mounting holes.

Figure 2.5

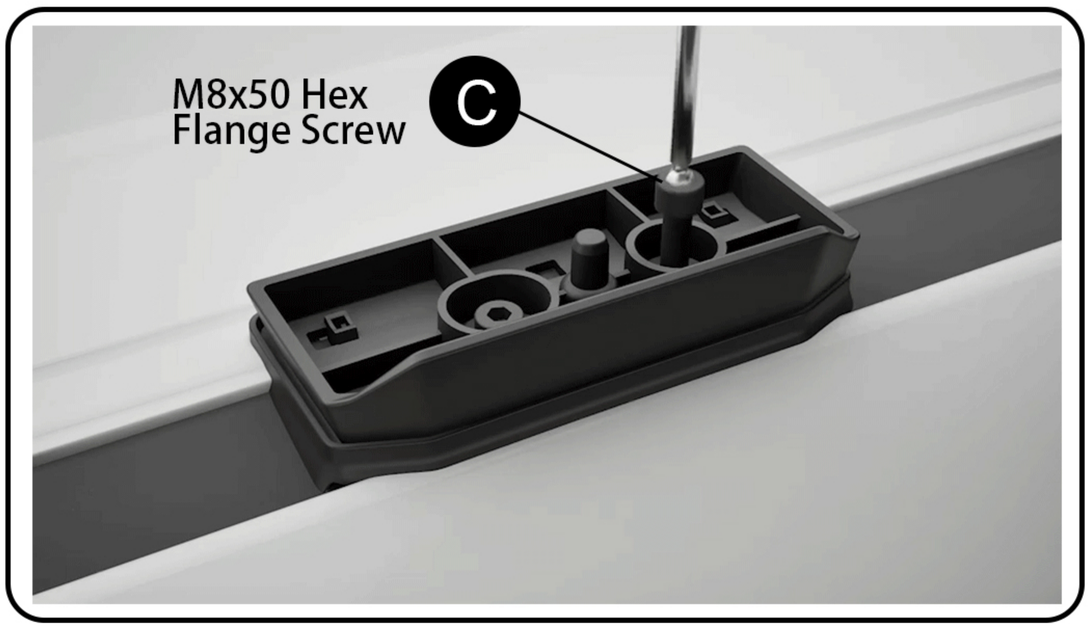

Fix the middle base (B) using M8x50 hexagonal screws (C).

Figure 2.6

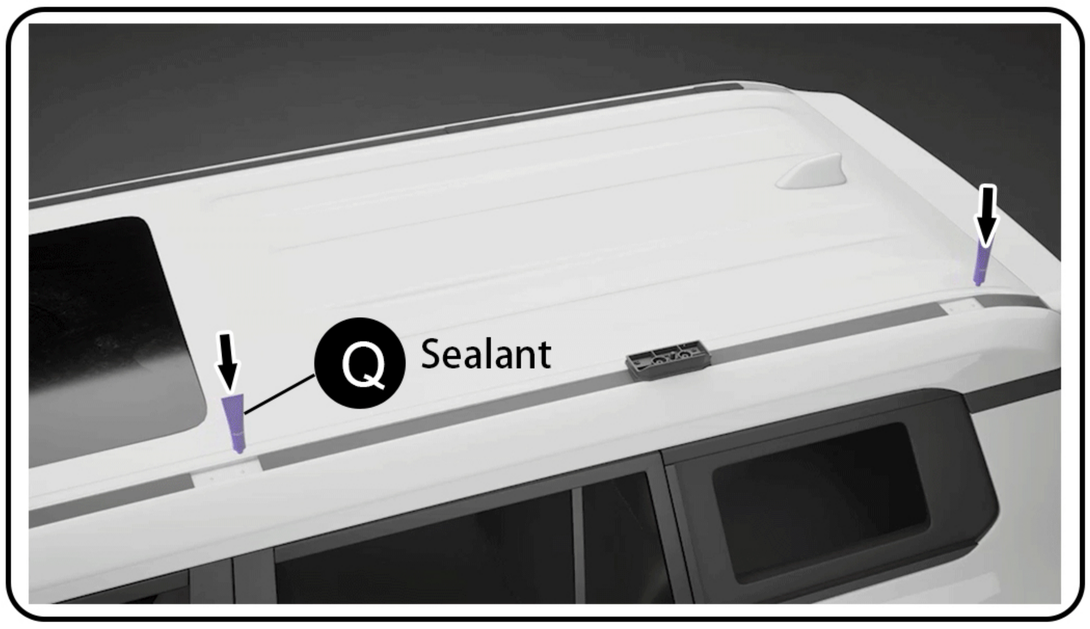

Remove the front and rear roof covers, screws, and brackets in sequence. Apply sealant (Q) to the exposed mounting holes.

Figure 3.1

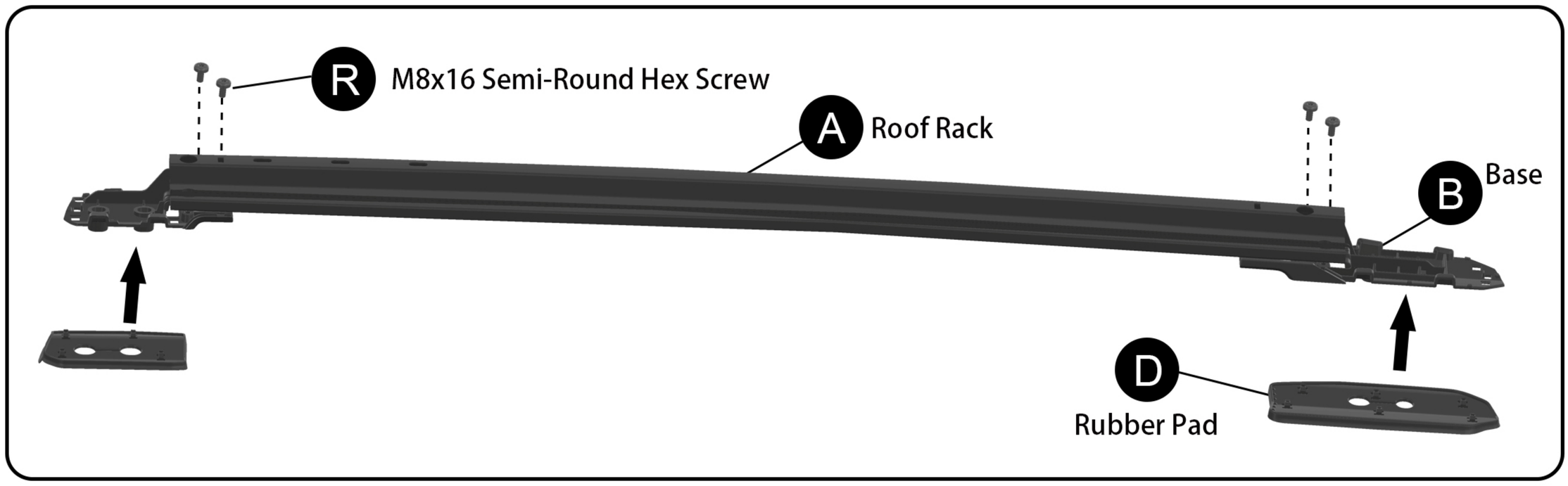

Assemble the roof rail (A) with the base mount (B). Secure using screws (R), and attach the rubber pad (D) to the base mount.

Figure 3.2

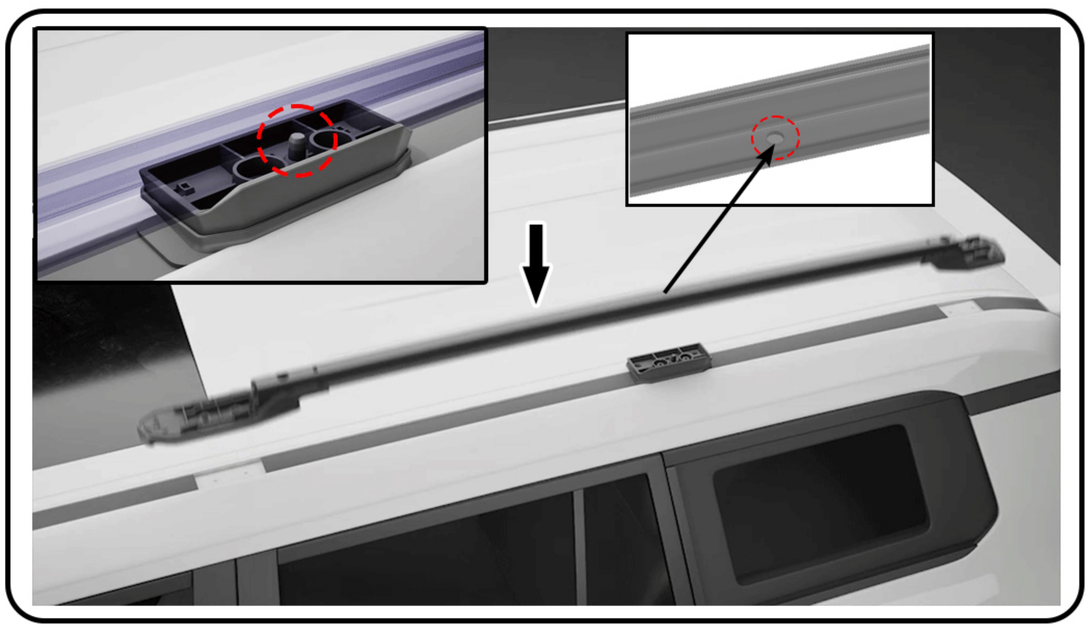

Place the roof rail (A) onto the car roof. Align the mounting holes on the roof rail with the raised column of the center mount (B).

Figure 3.3

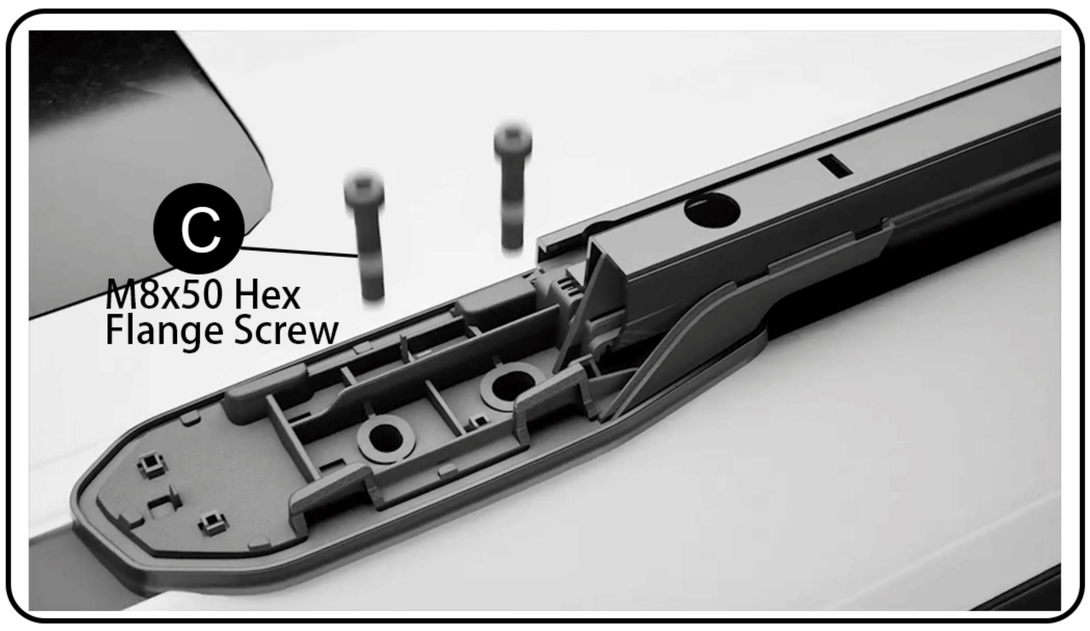

Align the front base mount with the corresponding holes on the car roof, then secure using M8x50 Hex Flange Screws (C).

Figure 3.4

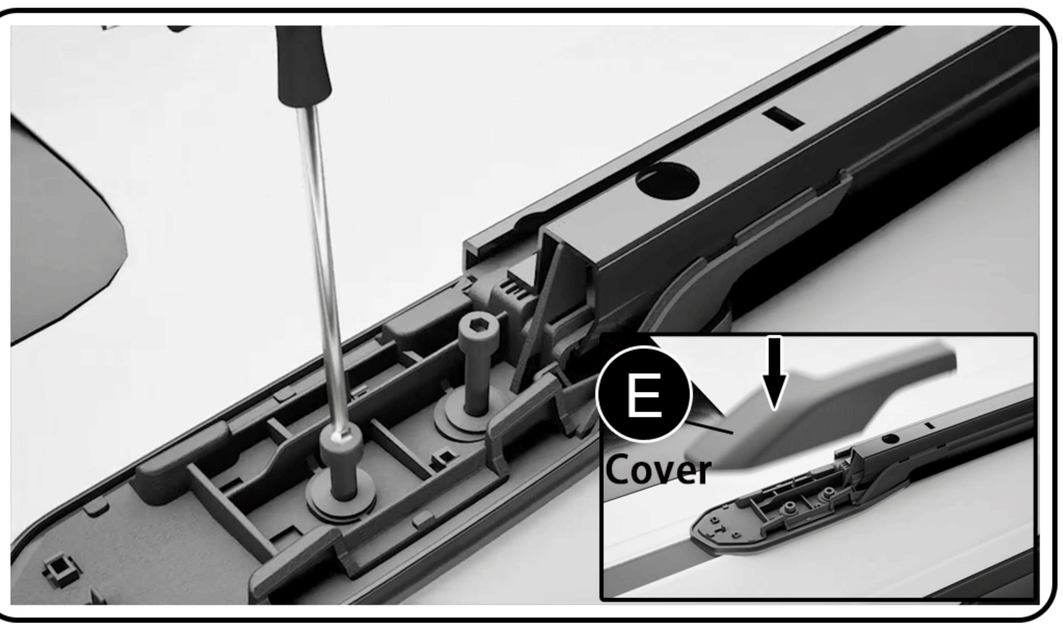

Tighten the screws and attach the front end Covers(E).

Figure 3.5

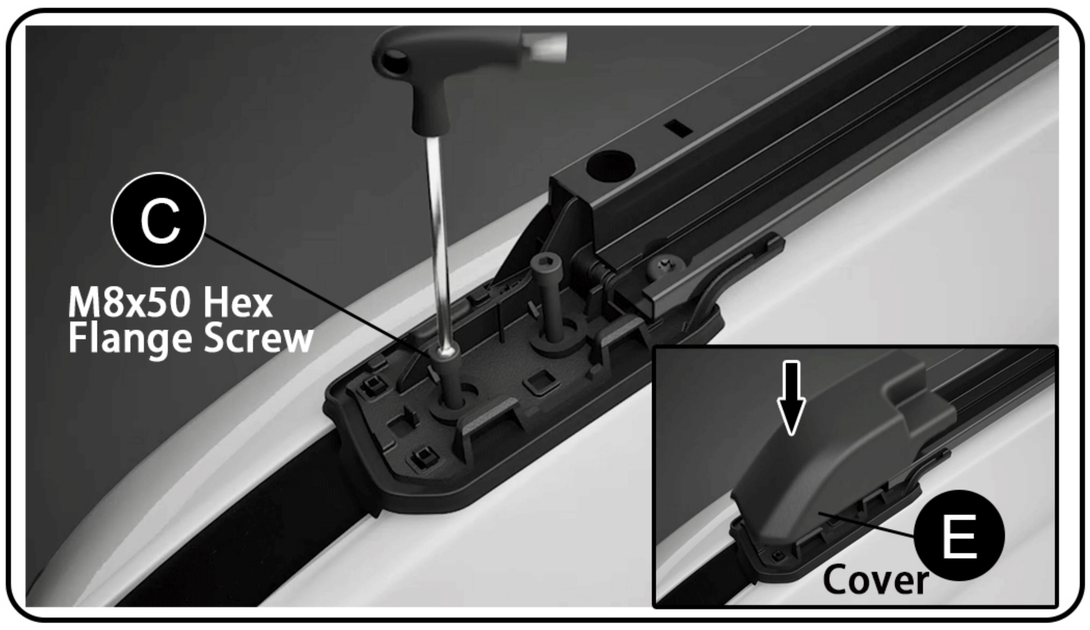

Repeat the above steps. Use M8x50 external hexagon screws (C) to secure the rear base mount, then attach the rear end Covers (E).

Figure 4.1

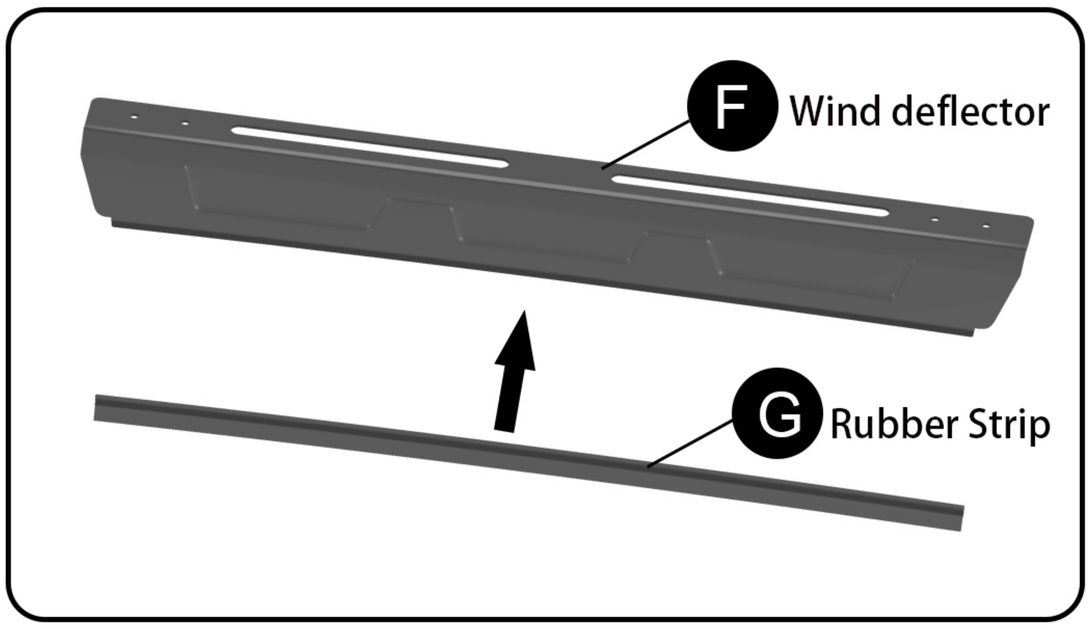

Attach the rubber strip (G) to the bottom of the Wind deflector (F).

Figure 4.2

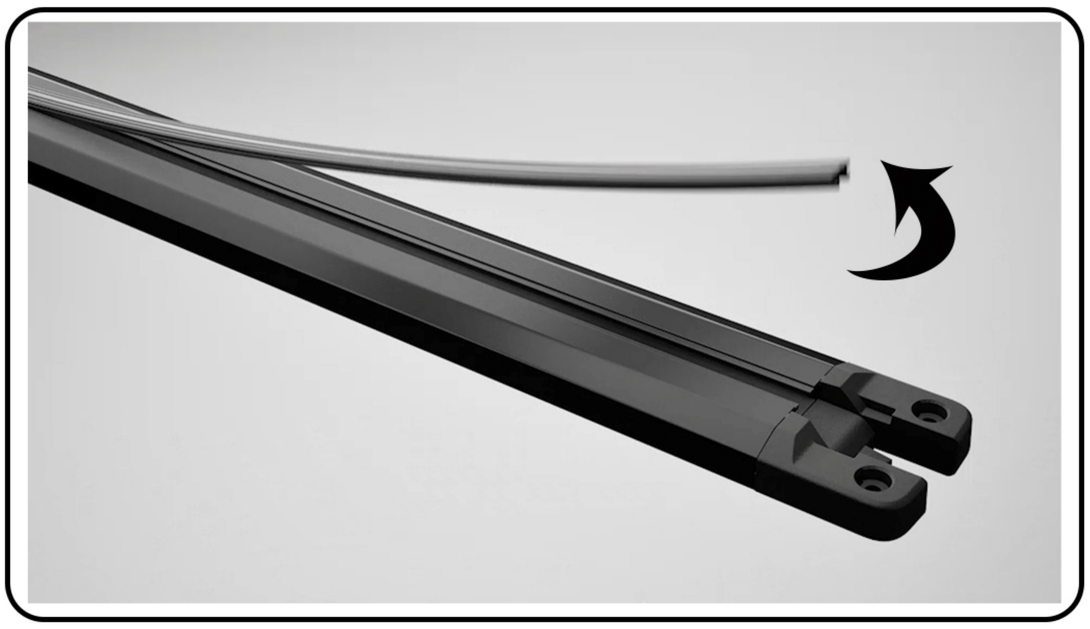

Remove the rubber strip from the crossbar (L).

Figure 4.3

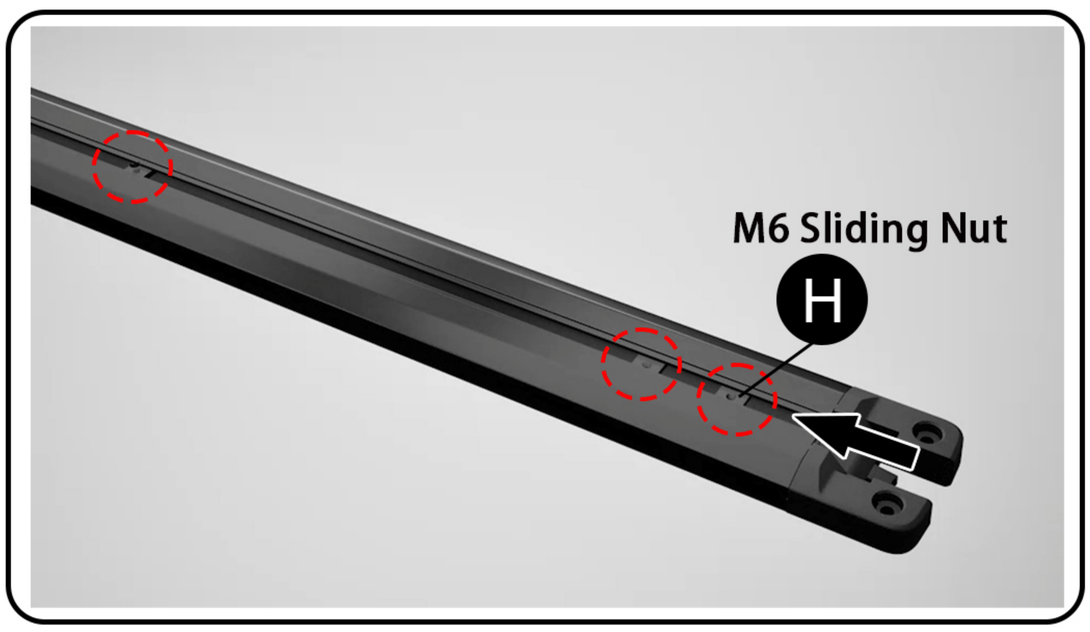

Insert the M6 sliding nuts (H) into the sliding groove of the crossbar (L) as shown.

Figure 4.4

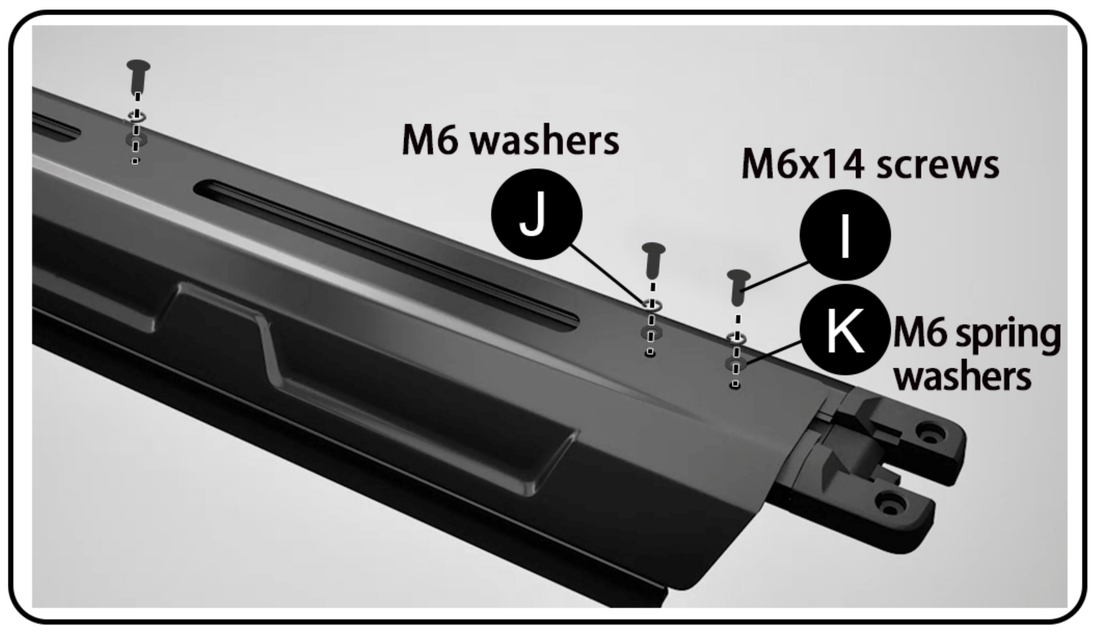

Position the wind deflector (F) onto the crossbar (L). Align the mounting holes and secure using M6x14 screws (I), M6 washers (J), and M6 spring washers (K).

Figure 4.5

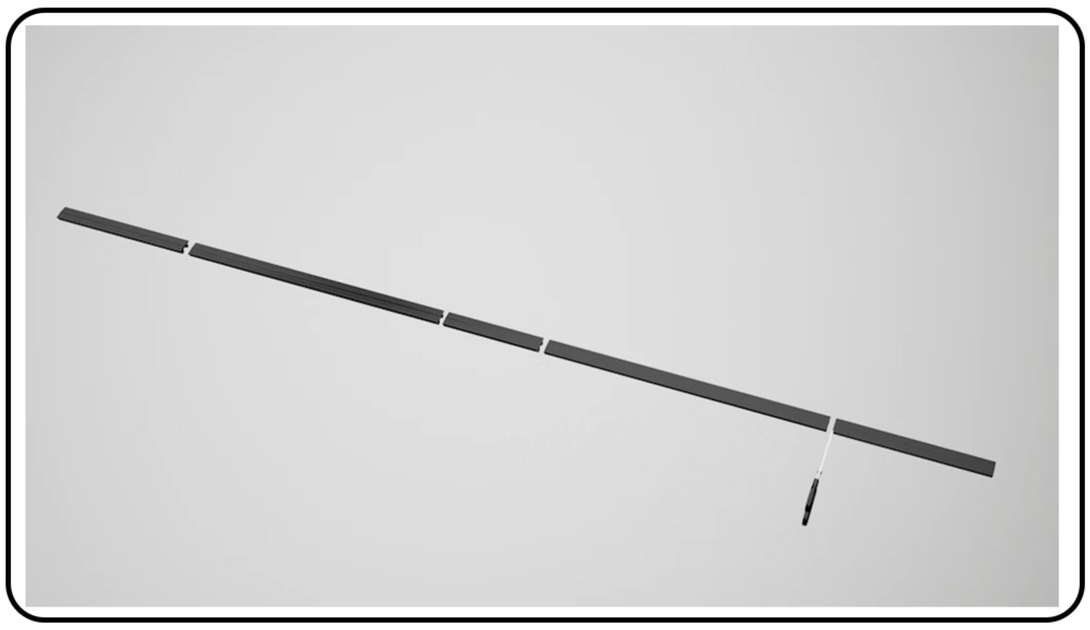

Cut the removed rubber strip to the appropriate length according to the groove of the wind deflector.

Figure 4.6

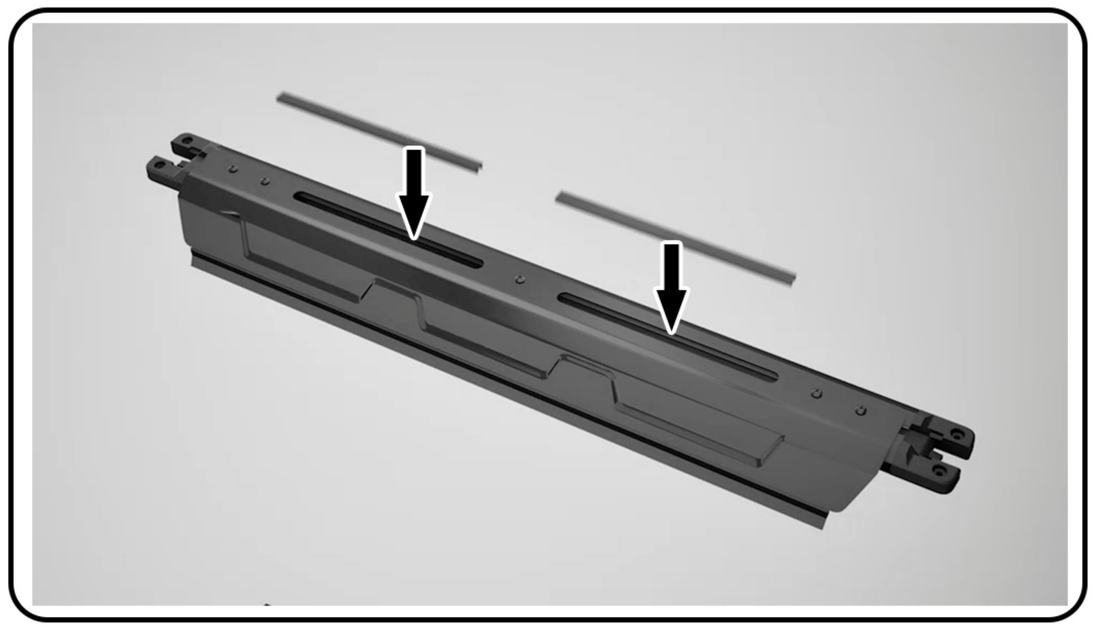

Place the rubber strip into the groove of the wind deflector as shown, ensuring a firm and even fit.

Figure 5.1

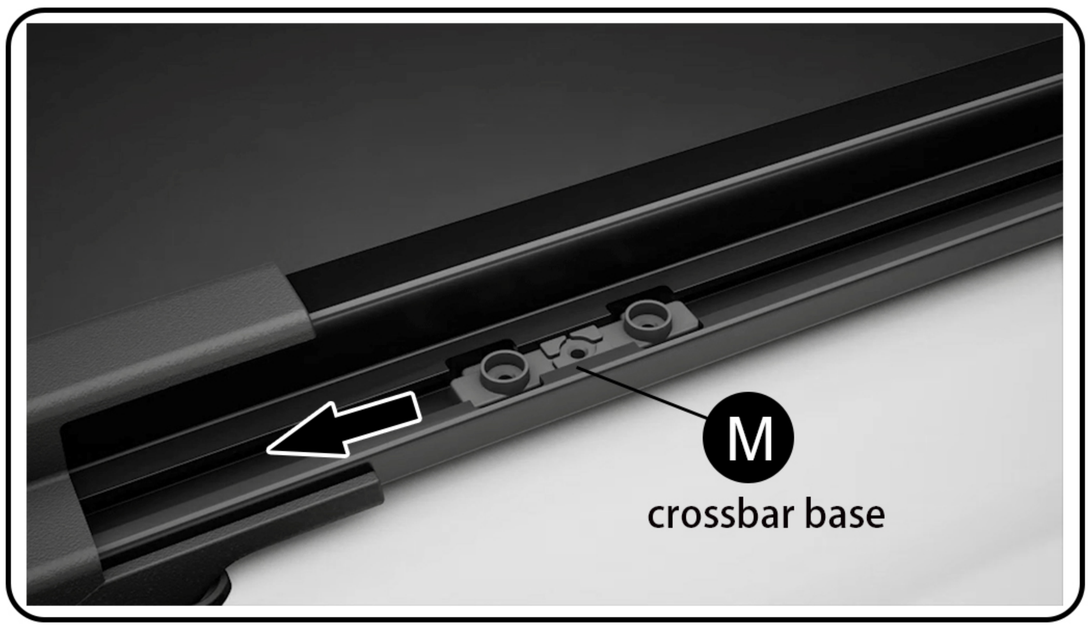

Insert the crossbar bases (M) into the sliding grooves of the roof rail. Adjust to the desired position.

Figure 5.2



Place the installed wind deflector and crossbar onto the roof rail. Align both ends with the mounting holes on the crossbar bases. Secure using M6x25 screws (N).

Figure 5.3



Sequentially install the remaining crossbars (L) onto the roof rail. Adjust the front and rear positions as needed. Tighten the screws to secure.

Figure 5.4

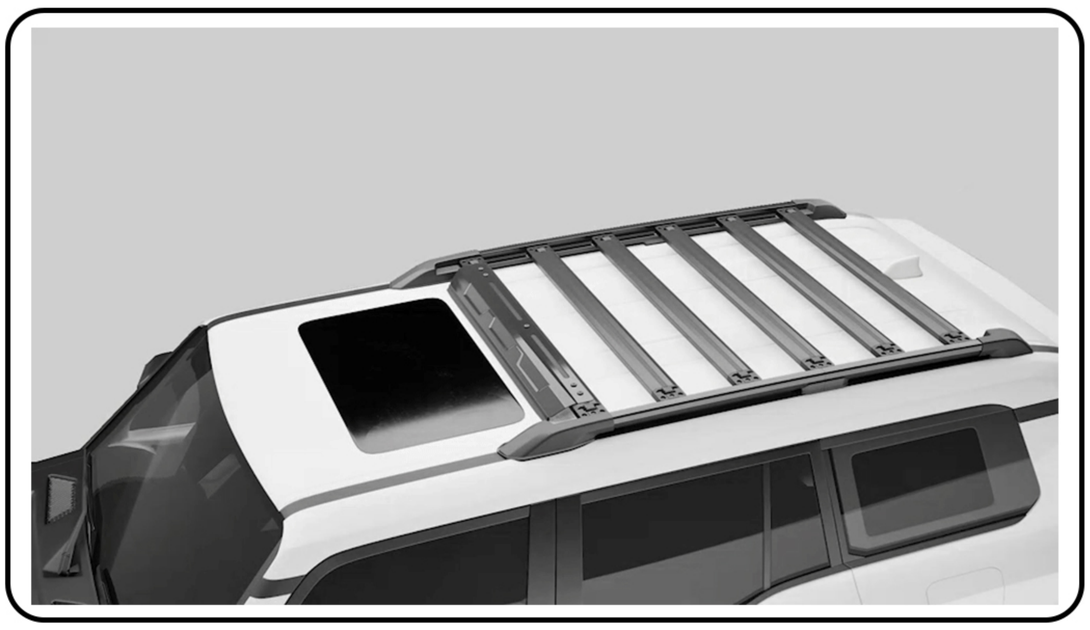

Confirm that all components are firmly secured. Installation complete.

Notes:

1.During installation, ensure that all screws, nuts, and washers are securely tightened.
2.Regularly inspect the stability of the roof rail and crossbars to ensure safe usage.
3.Avoid overtightening screws to prevent damage to components.