PEAK

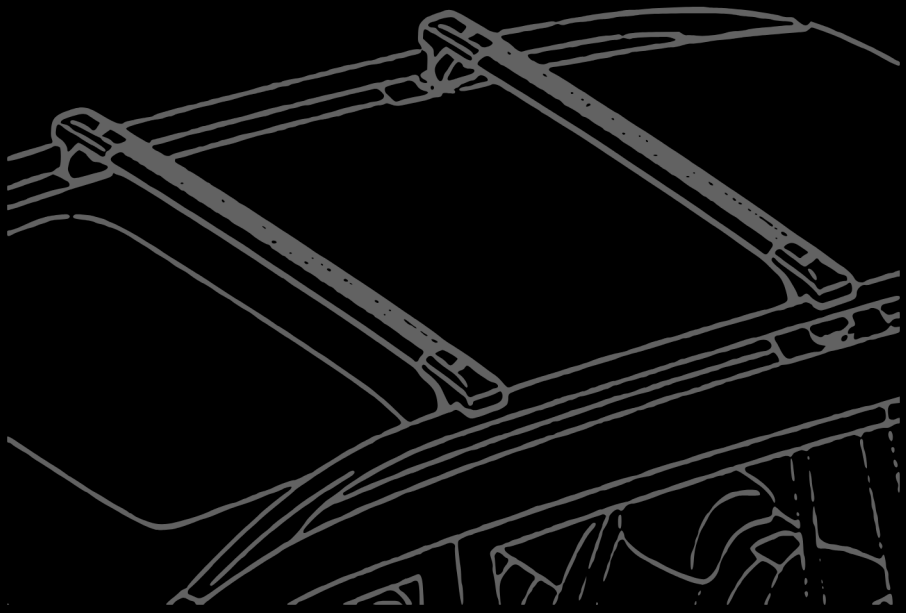

INSTALLATION GUIDE

CROSS BARS

TOYOTA LANDCRUISER 300 SERIES

OVERVIEW

BEFORE YOU START

This guide takes you through fitting your PEAK cross bars to the factory roof rails on the Toyota LandCruiser 300 Series. Read it through once before you start.

TWO PEOPLE

One person each side makes it easy to lower the bars on without marking the roof.

WORK SAFELY

Use a step ladder or work platform to reach the roof. Never stand on the door sills or tyres.

CLEAN RAILS

Wipe the roof rails clean first. Grit under a foot or clamp can mark the rail.

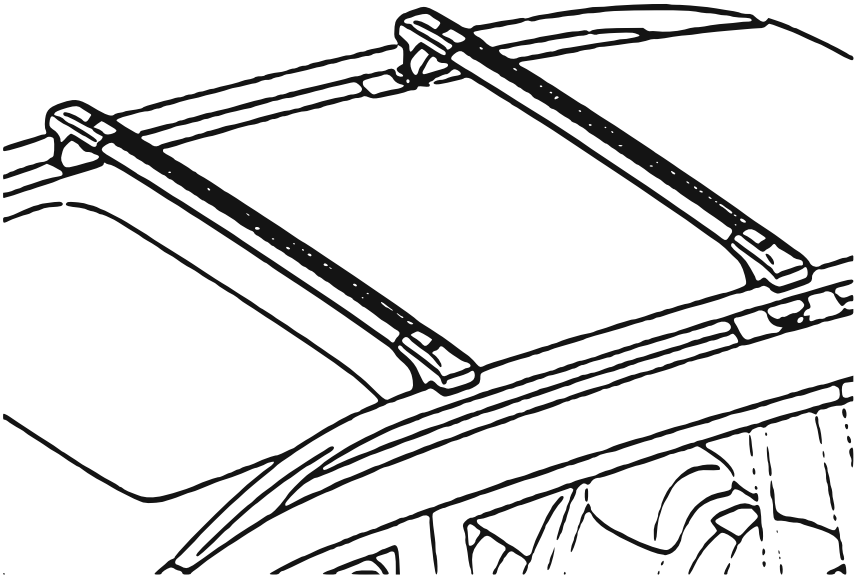

CROSS BARS FITTED TO THE FACTORY ROOF RAILS

KIT CONTENTS

WHAT'S IN THE BOX

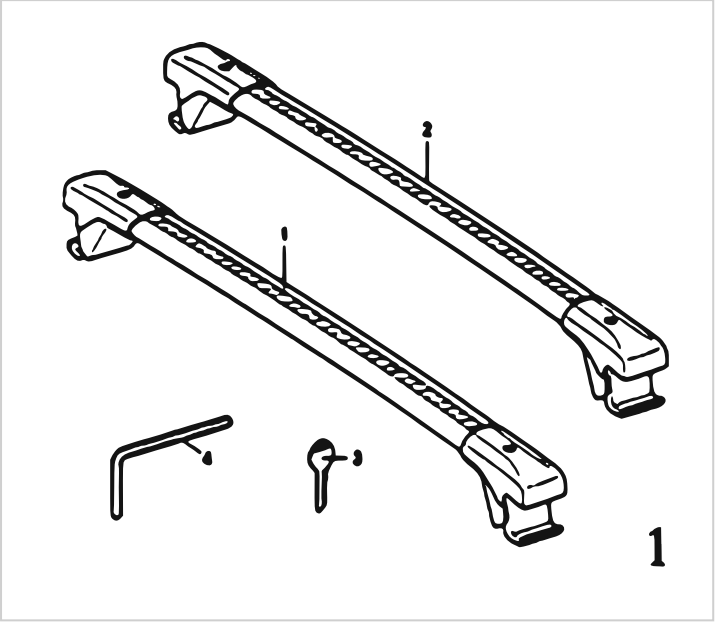

NO.	PART
1	Cross bar
2	Cross bar
3	Key, for the end cover locks
4	Hex key, for the clamp bolts

TOOLS YOU'LL NEED

The hex key is supplied. You'll also need a step ladder or work platform, and a clean cloth for the rails.

INSTALLATION

FITTING THE CROSS BARS

01

CHECK THE PARTS

Lay out cross bar 1, cross bar 2, the key (3) and the hex key (4). Each bar has a foot at both ends.

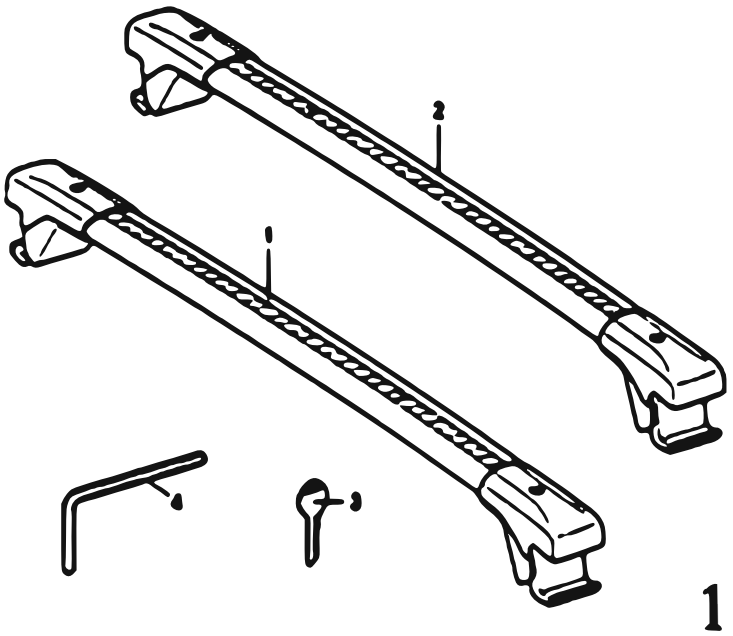

02

OPEN THE FEET

On each foot, unlock the end cover with the key (3) and lift it off. Loosen the clamp bolt with the hex key (4) so the clamp is free to move.

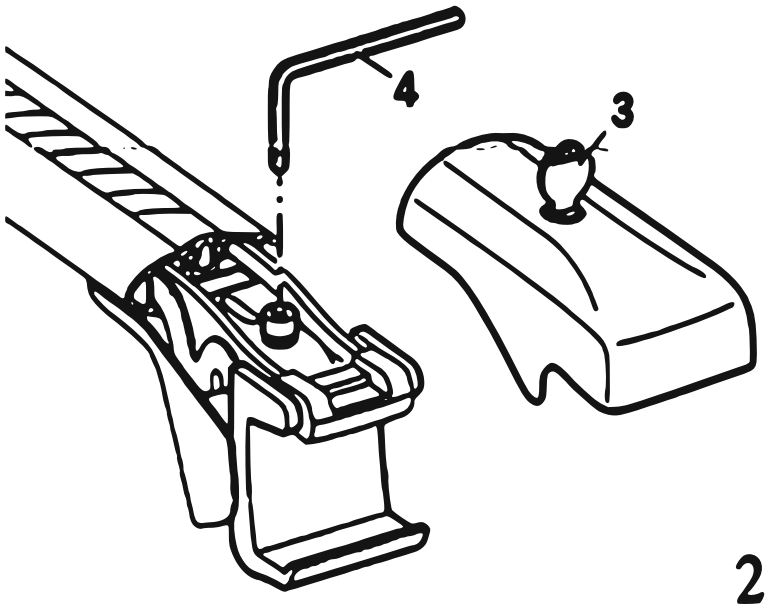

03

HOW THE CLAMP GRIPS THE RAIL

The foot sits on top of the factory roof rail and the clamp hooks under the edge of the rail, as shown in this cross section. Make sure the clamp and the rail are clean before fitting.

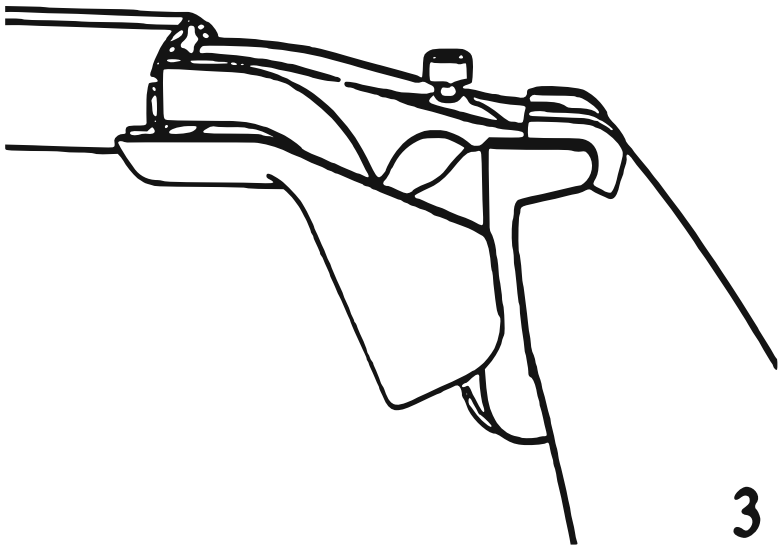

04

PLACE THE BARS

Lower cross bar 1 and cross bar 2 onto the roof rails in the positions shown, with every foot sitting flat on the rail and each clamp hooked under the rail edge.

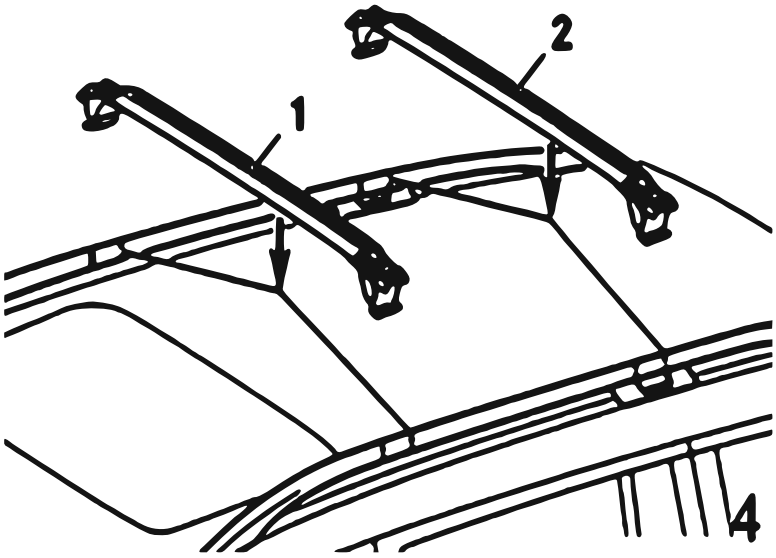

05

TIGHTEN AND LOCK

Tighten the clamp bolts (4) on every foot with the hex key, working evenly from side to side. Check both bars sit square across the roof, then refit the end covers and lock them with the key (3).

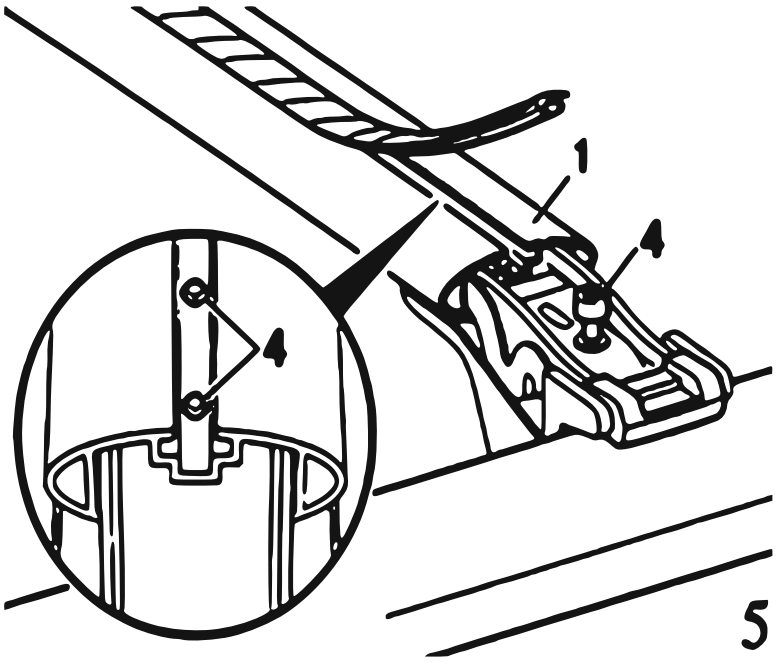

FINAL CHECKS AND CARE

- Push and pull firmly on each bar. Nothing should move or rock on the rails.
- Recheck the clamp bolts after your first drive, then regularly after that, especially after off-road driving or corrugated roads.
- Never load more than the lower of the cross bar rating and your vehicle's roof load limit.
- Take the key out before driving and keep it somewhere safe.
- Wash the bars with mild soap and water. Avoid harsh cleaners on the end covers.

SUPPORT

NEED HELP?

If anything doesn't line up during fitting, contact Peak before you modify anything. Have your order number and a photo or short video ready.

EMAIL

info@peakbuilt.com.au

WEB

peakbuilt.com.au

We reply to emails within one business day.

PEAK

peakbuilt.com.au

info@peakbuilt.com.au