BLADE PLATFORM FITS FOR LC250



INFORMATION

The information in these installation instructions is intended for use only by skilled technicians who have the proper tools, equipment, and training to correctly and safely install equipment in your vehicle. These procedures should not be attempted by individuals without professional expertise or by "do-it-yourselfers."

WARNING ⚠

It is critical that all products are properly and securely assembled and attached to your vehicle. Improper attachment could result in an automobile accident, causing serious bodily injury or death. You are responsible for assembling and securing all components to your vehicle, checking the attachments prior to use, and periodically inspecting the products for adjustment, wear, and damage.
Therefore, you must read and understand all instructions and precautions supplied with your product prior to installation or use. If you do not understand all instructions and cautions, or if you lack mechanical experience and are not thoroughly familiar with the installation procedures, you should have the product installed by a professional installer or other qualified personnel.

NOTE: We will not be responsible for any damage caused by the failure to install the product according to these instructions. If you have any questions about the installation of this product, please contact us for assistance.

PARTS LIST

ID	picture	Qty
Ⓐ	 Front plate	1
Ⓑ	 Left & Right Side Panels	Lx1 Rx1
Ⓒ	 Back plate	1
Ⓓ	 Original Hole Support Bracket	6
Ⓔ	 Rain Gutter Rubber Pad	6
Ⓕ	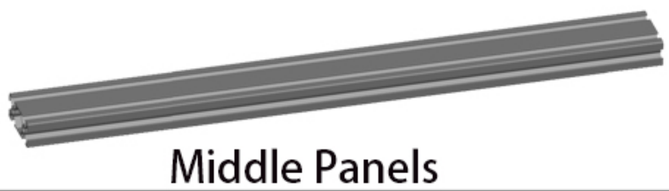 Middle Panels	8
Ⓖ	 M8*20 Pan Head Torx Screws	52

ID	picture	Qty
Ⓗ	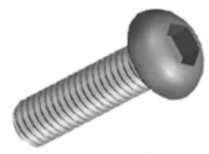 M8*35 Button Head Hex SocketScrew	12
Ⓘ	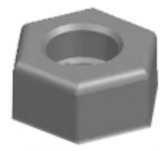 M8 nut	20
Ⓙ	 8*16mm Flat Washer	64
Ⓚ	 T45 wrench	1
Ⓛ	 6mm wrench	1
Ⓜ	Middle plate rubber strip 2000mm	16
Ⓝ	Front plate rubber strip 1300mm	1

Note: Left front FL, right front FR, left middle ML, right middle MR, left back RL, right back RR

Install the front plate rubber strip

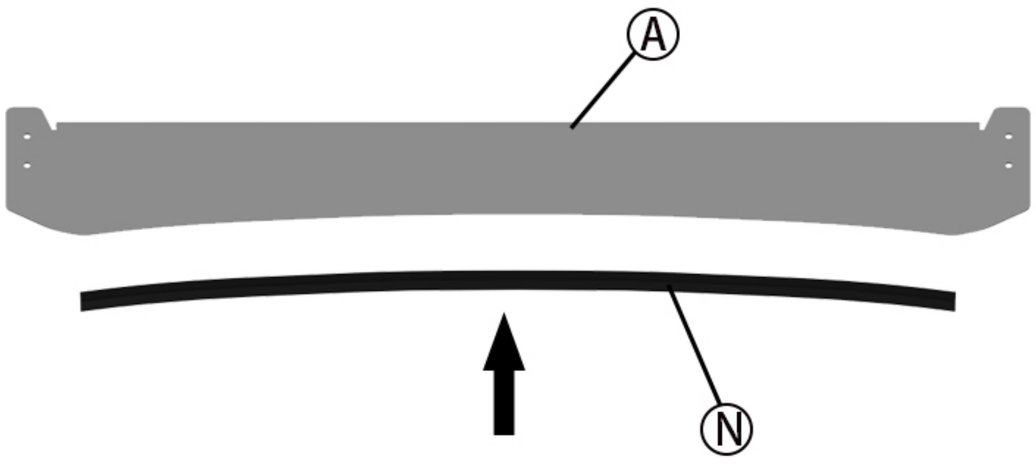

Install the middle plate rubber strip

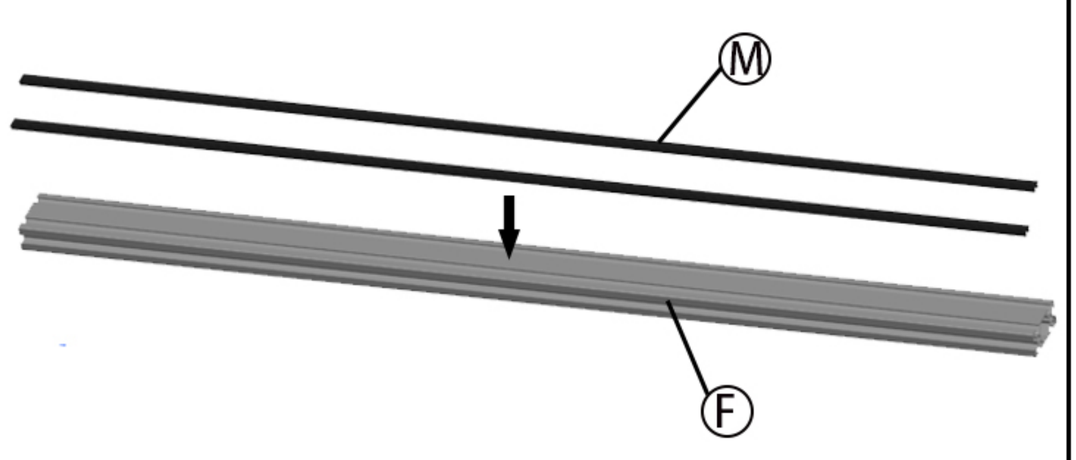

①

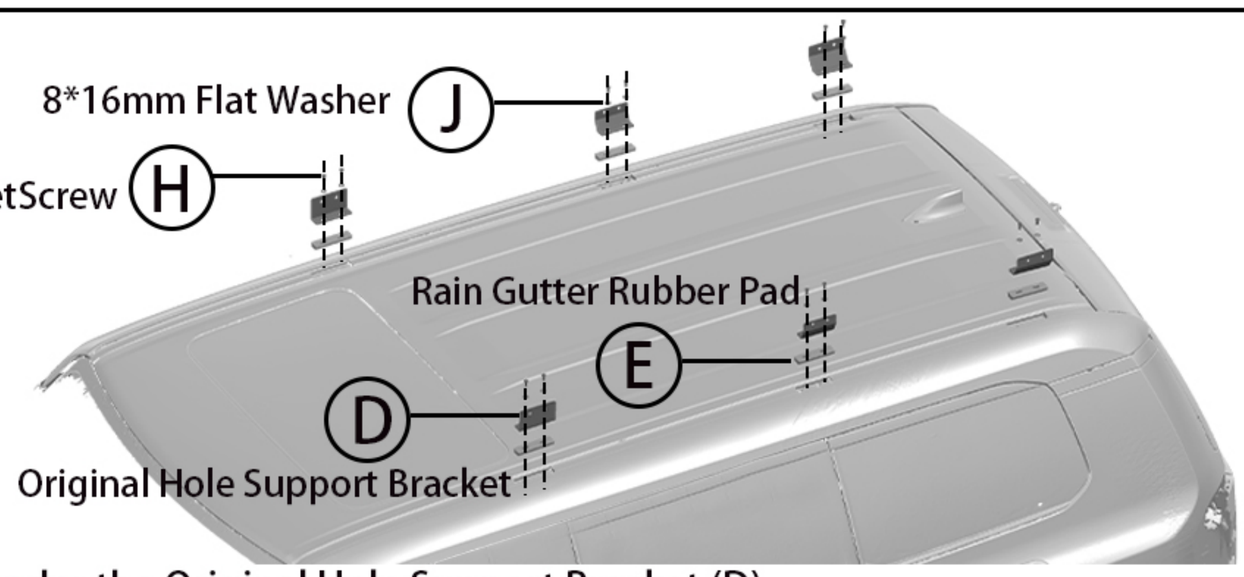

Place the Rain Gutter Rubber Pad (E) under the Original Hole Support Bracket (D)
and align it with the pre-drilled holes.Use M8*35 Button Head Hex Socket Screws (H)
and 8*16mm Flat Washers (J) to secure the connection. Tighten all components to ensure stability.

②

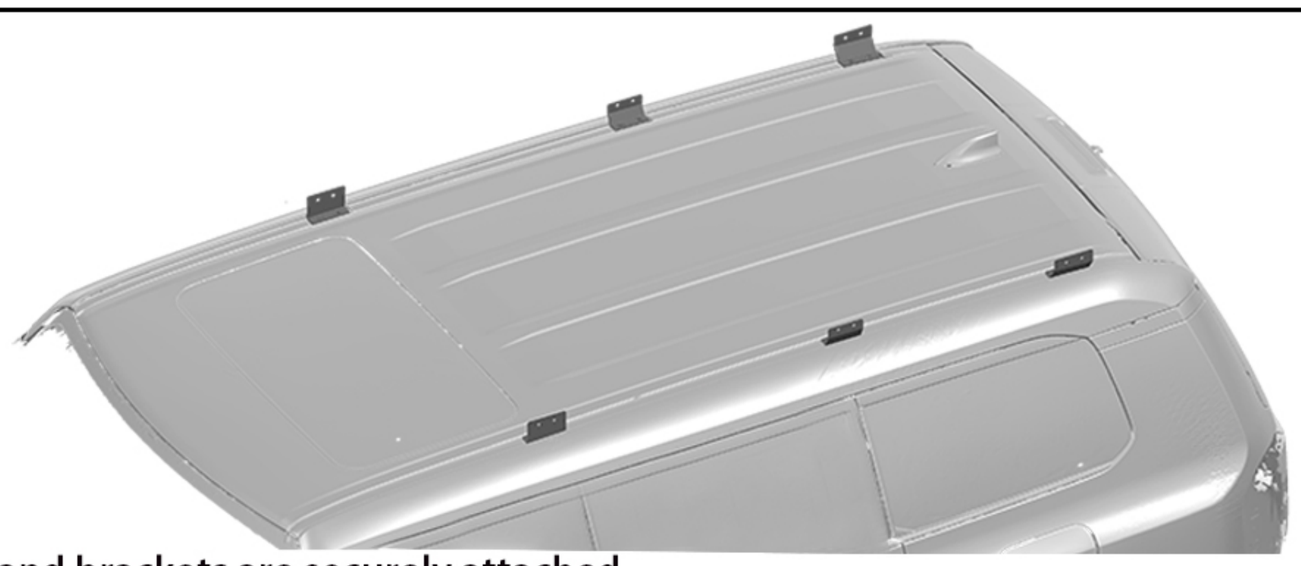

Ensure that all rubber pads and brackets are securely attached.
This completes the first part of the installation.

③

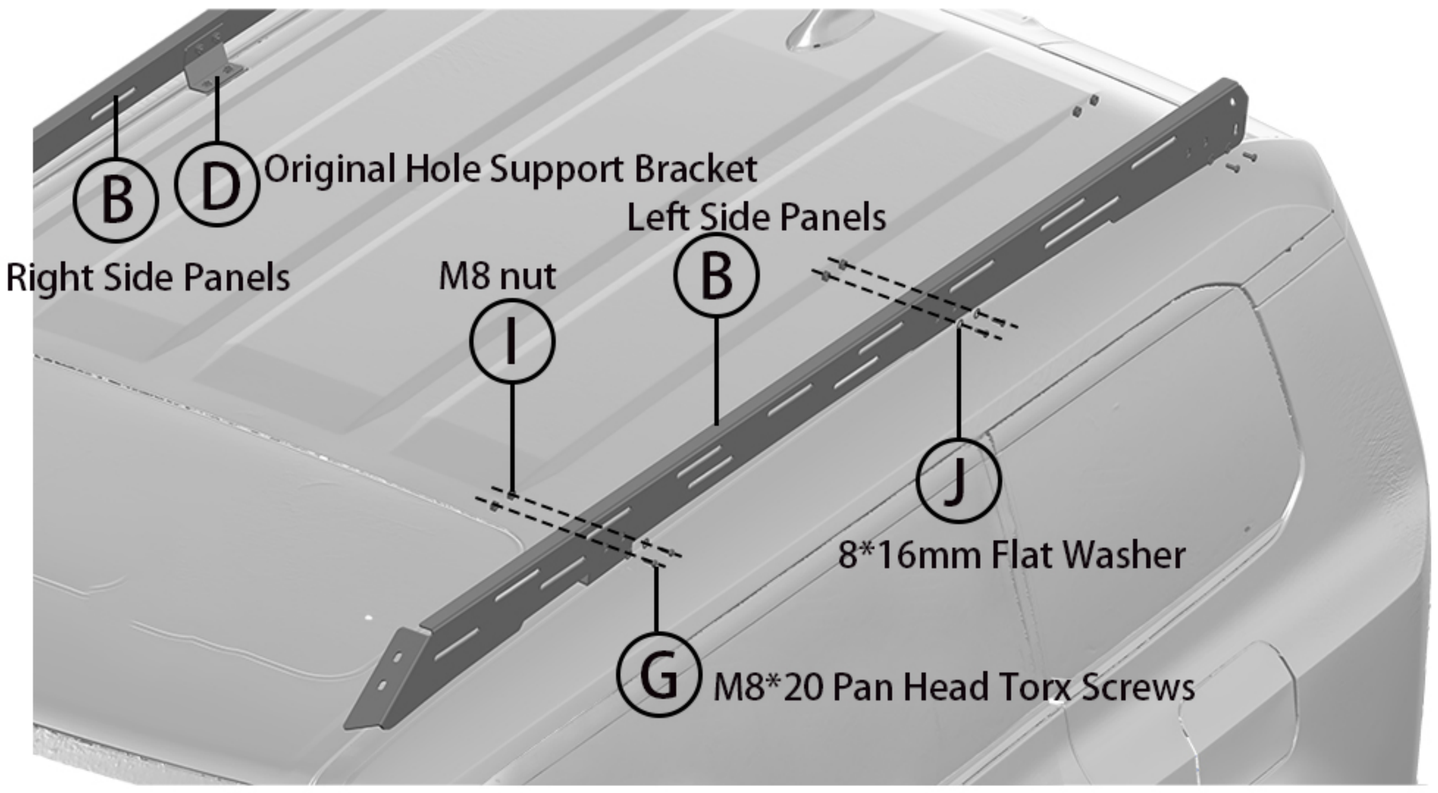

Attach the Left and Right Side Panels (B) to both sides of the Original Hole Support Brackets (D).
Secure the panels using M8*20 Pan Head Torx Screws (G), 8*16mm Flat Washers (J), and M8 Nuts (I).

④

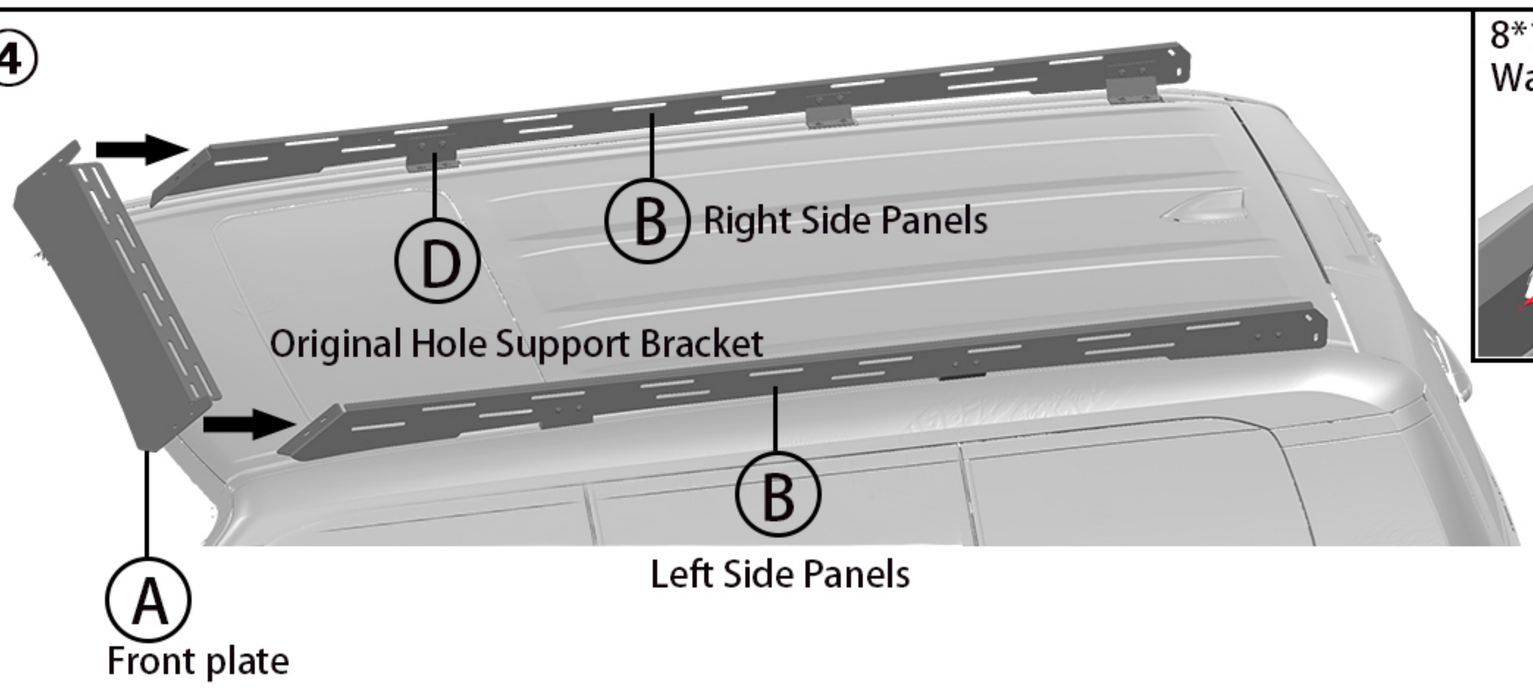

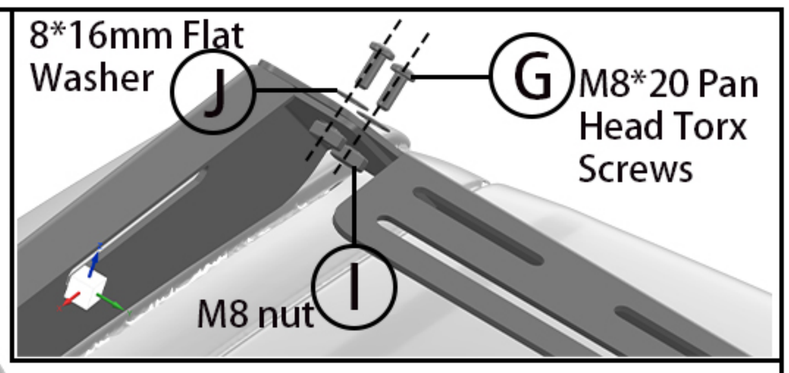

Align the Front Plate (A) with the Left and Right Side Panels (B) for connection.
Secure the connection using M8*20 Pan Head Torx Screws (G), 8*16mm Flat Washers (J), and M8 Nuts (I).
Check that all connections are properly aligned and tightened.

5

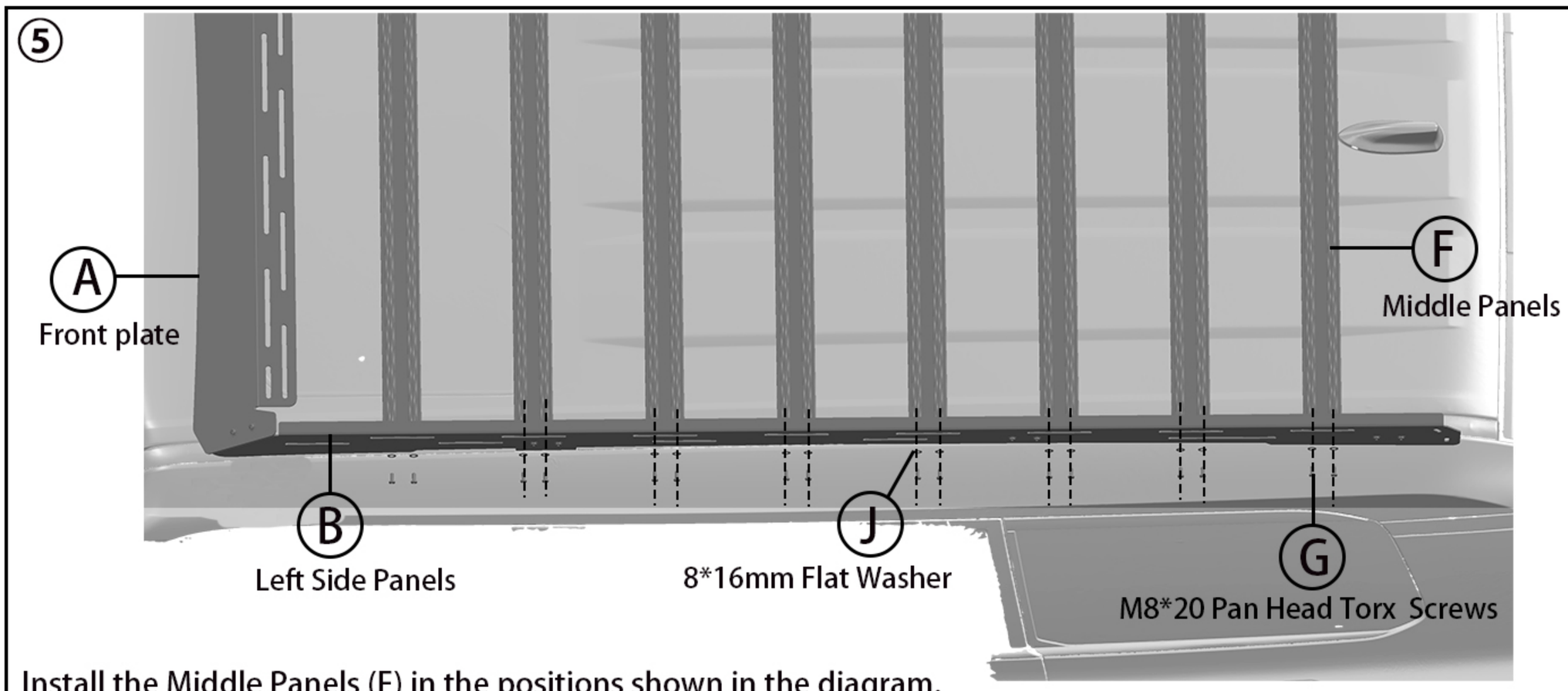

Install the Middle Panels (F) in the positions shown in the diagram.
Use M8*20 Pan Head Torx Screws (G) and 8*16mm Flat Washers (J) to connect the middle panels to the Left and Right Side Panels (B). Ensure all screws are tightened.

6

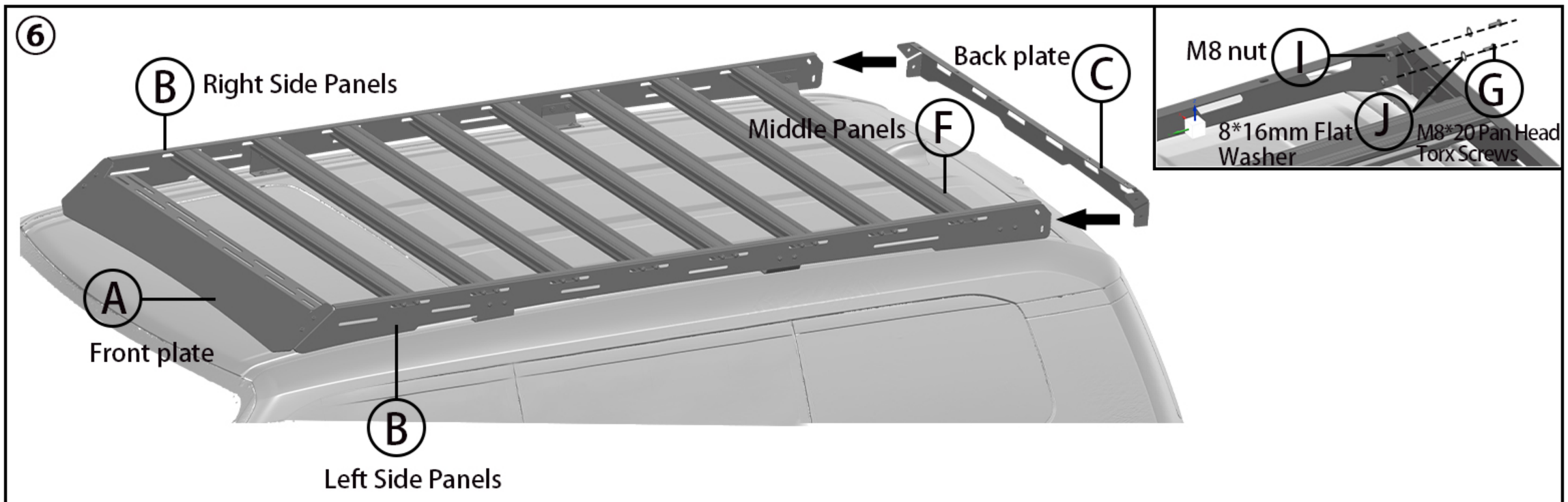

Align the Back Plate (C) with the Left and Right Side Panels (B) for connection.Secure the back plate to the side panels using M8*20 Pan Head Torx Screws (G), 8*16mm Flat Washers (J), and M8 Nuts (I). Ensure all connection points are tight.

7



Ensure that all components (Front Plate, Side Panels, Middle Panels, Back Plate) are correctly installed and securely tightened.