This Product Must Not Be Modified  Approx Install Time : 1Hr

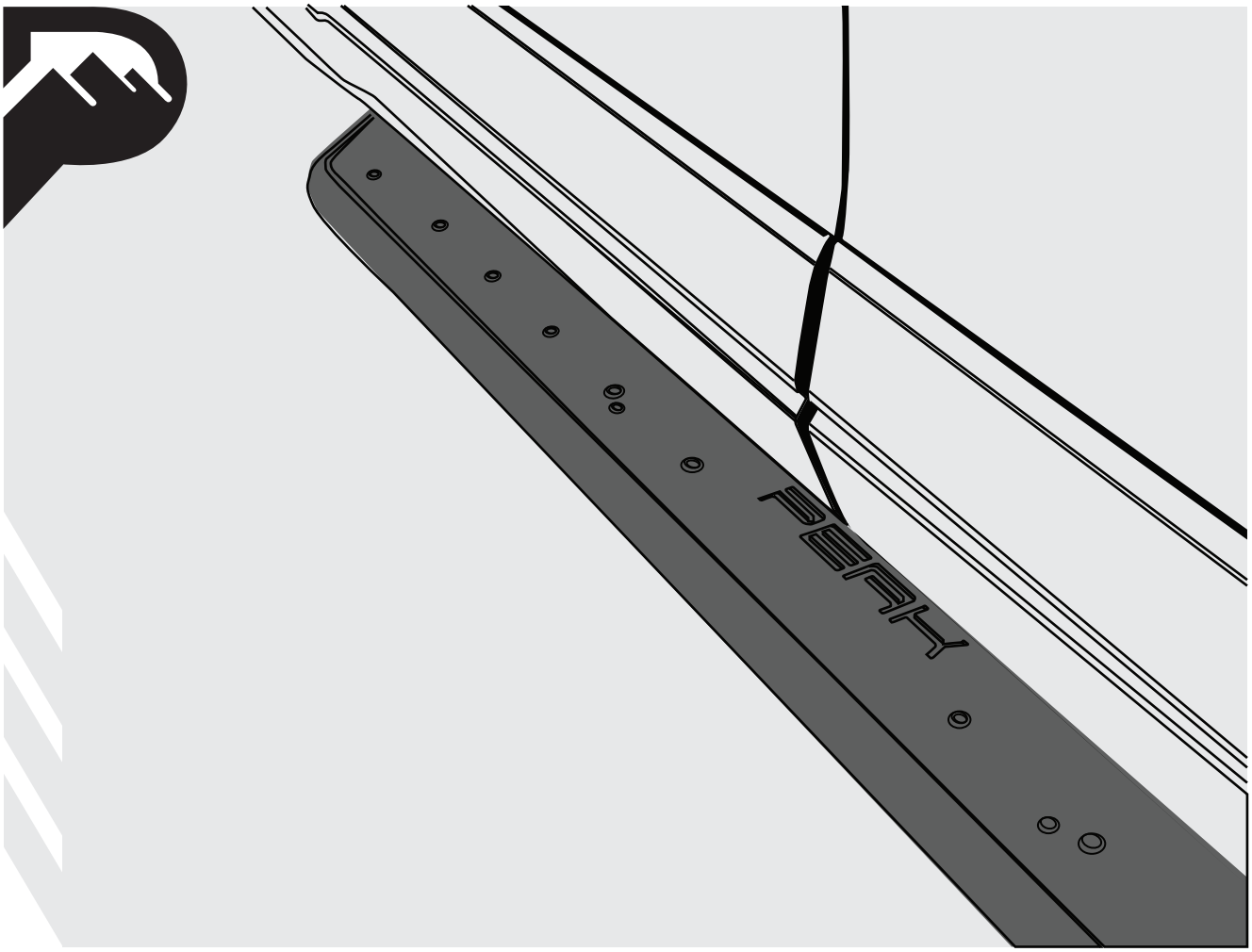


# PEAK ROCK SLIDER
## Installation Manual

SSANGYONG MUSSO
SSANGYONG REXTON

**IMPORTANT :**
Rock Slider installations should only be done by a qualified person and it is the responsibility of this person to ensure correct fitment

# DISCLAIMER

Important Notice Regarding Installation and Warranty

Thank you for choosing the PEAK ROCK SLIDER. This manual contains essential instructions for proper installation and usage. It is of utmost importance that you carefully read and follow these guidelines. Additionally, we want to emphasize the critical role of experience and expertise in installing this Rock Slider correctly.

Experienced Installation

Installing a Rock Slider requires a certain level of technical skill and knowledge. We strongly recommend that the installation be carried out by a qualified professional who has experience with vehicle modifications and Rock Slider installation. Incorrect installation can lead to safety hazards and vehicle damage.

Voidance of Warranty

Please be aware that improper installation, use of unauthorized parts, or installation by unqualified individuals can void the warranty of the Rock Slider and associated components. Any damage resulting from improper installation or use will not be covered under warranty.

Liability and Responsibility

We, the manufacturer, cannot be held responsible for any damage, injury, or loss caused by improper installation, modification, or usage of this product. It is the responsibility of the installer and the vehicle owner to ensure that installation is conducted according to the instructions provided in this manual.

Safety First

Your safety and the safety of others on the road are paramount. If you are not confident in your ability to install the Rock Slider correctly, or if you lack experience in vehicle modifications, we strongly recommend seeking assistance from a certified professional.

Professional Installation Recommended

To ensure optimal performance, safety, and warranty coverage, we strongly advise having your rock slider installed by a qualified technician who is knowledgeable about Rock Slider installations and adheres to industry standards.

By proceeding with the installation of this Rock Slider, you acknowledge that you have read and understood this disclaimer, and you accept full responsibility for the installation process and its outcomes.

If you have any questions or concerns, please contact our customer support team before proceeding.

Thank you for choosing our product, and we appreciate your commitment to safety and quality installation.

# SAFETY PPE

| | |
|---|---|
|  Ear Protection | Always wear ear protection when using power tools. |
|  Safety Glasses | Ensure eye protection is always worn when cutting or drilling. |
| 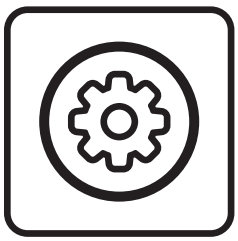 Manual Handling | Do not attempt to lift bar assemblies or rock sliders on your own.<br><br>Always use two people to lift or use mechanical Lifting aid such as hydraulic lifting trolley. |
|  Vehicle Support | Always ensure vehicle is properly supported when working on it. Do not attempt to fit products whilst supension work is being carried out.Do not work under a vehicle supported only by a jack. |

# TOOLS

| | | | |
|---|---|---|---|
| Ratchet | Socket Set | Spanner Set | Scissors |

# SUPPLIED HARDWARE

## Rock Slider LH x 01

1

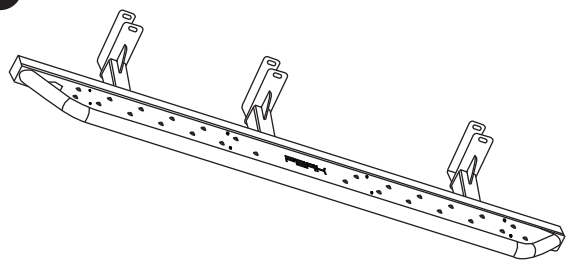

## Rock Slider RH x 01

2

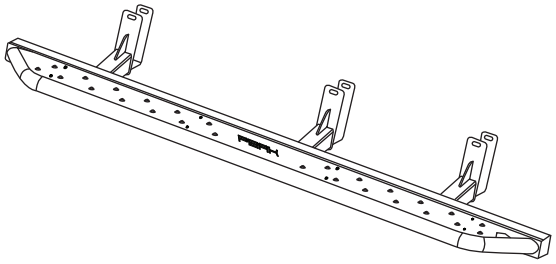

## Rubber - L70 mm. x 02

3

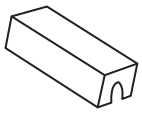

## Rubber - L80 mm. x 02

4

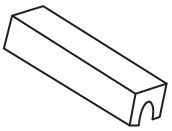

## Rubber - L90 mm. x 02

5

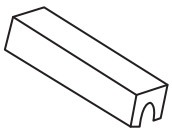

## Hex Bolt M12 x 120 mm. x 02

6

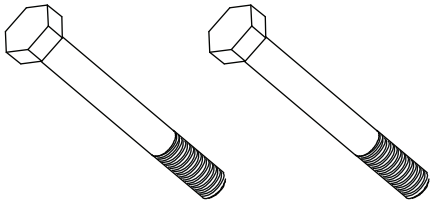

## Hex Bolt M12 x 150 mm. x 04

7

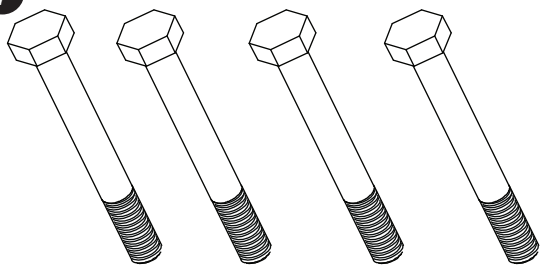

## Spring Washer M12 x 06

8

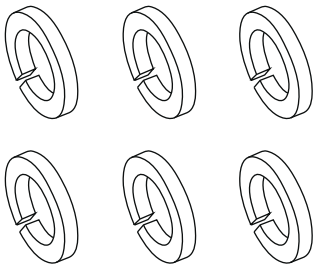

## Washer M12 x 12

9

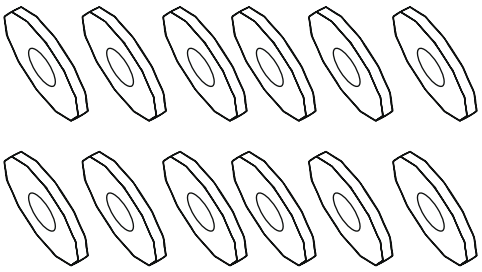

## Hex Nut M12 x 06

10

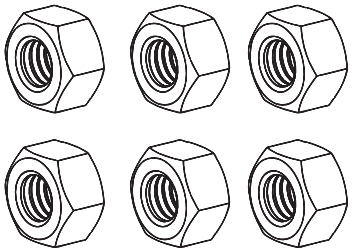

## Cable Ties x 6

11

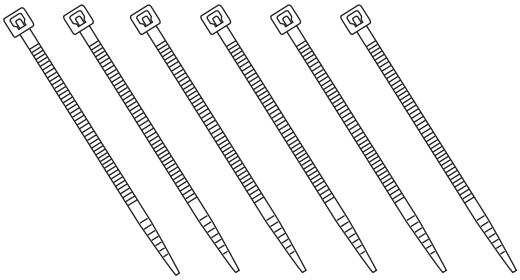

# Part 1
## FITTING ON THE LEFT AND RIGHT SIDE

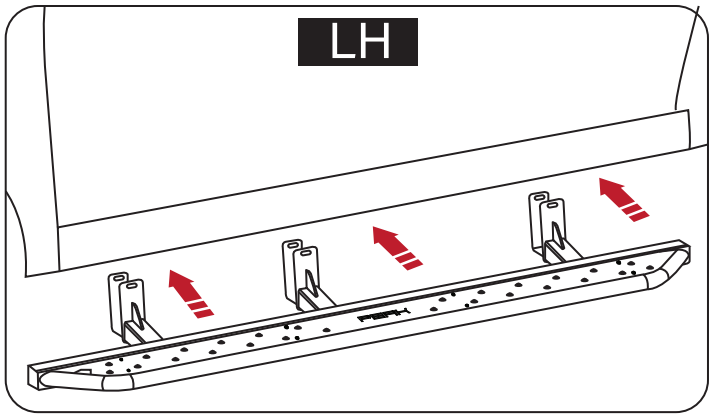


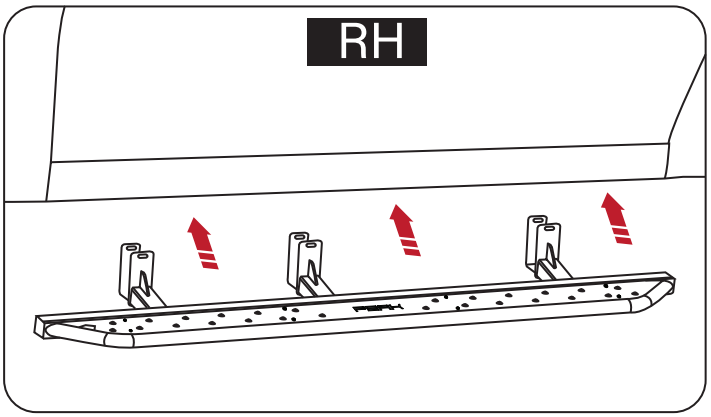


1. For attaching the rock slider, the front, middle, and rear brackets need to be fixed to the vehicle's chassis so that bolts can be installed and tighten.

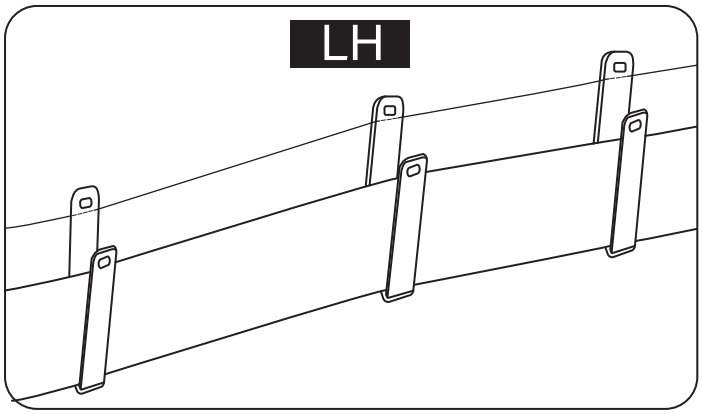


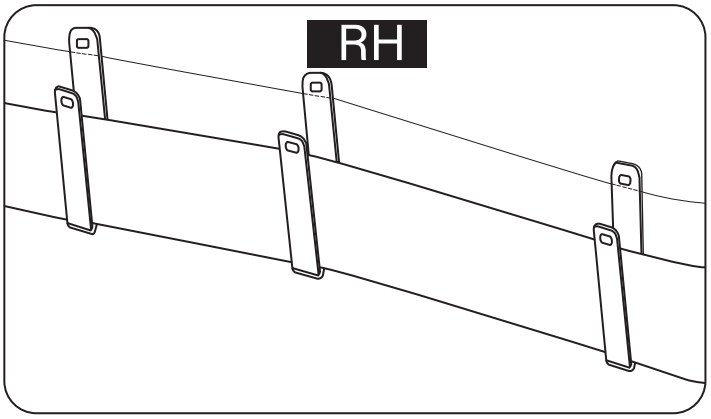


2. Take note of the bracket positions and factory brake/service lines. If needed, unclip them from the mounting points to ensure the rock slider mounting bolts can pass freely underneath.

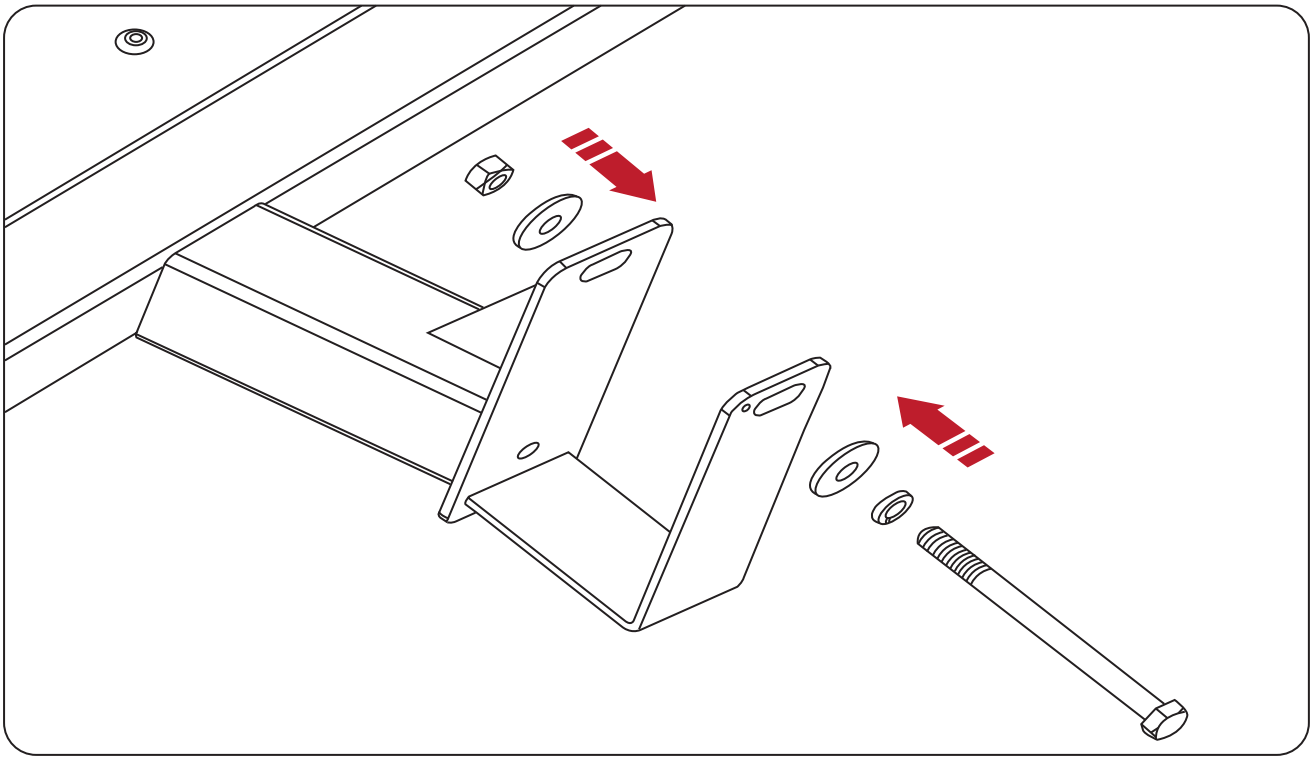

3. Use M12 x 150 mm.  bolts to tighten the front bracket both LH and RH.

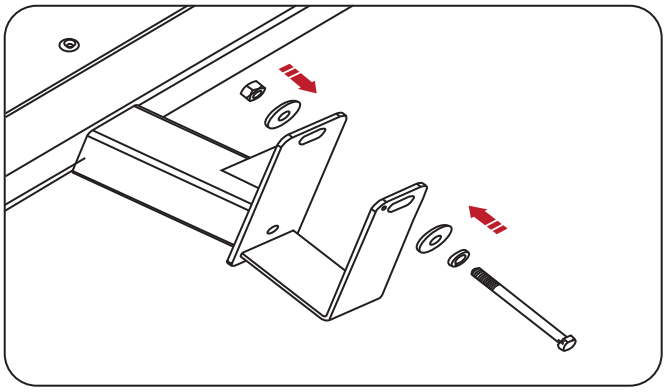

3.1 Use M12 x 150 mm. bolts to tighten the middle bracket both LH and RH.

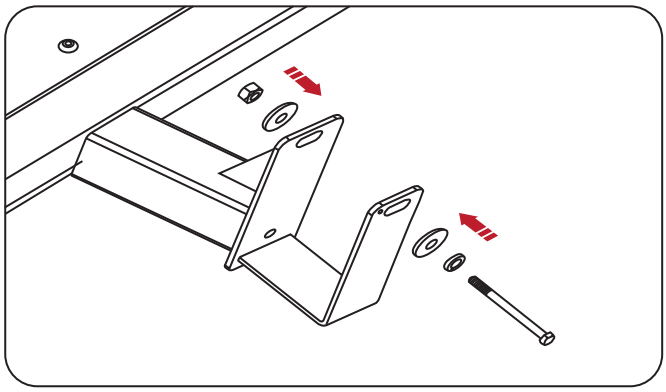

3.2 Use M12 x 120 mm. bolts to tighten the rear bracket both LH and RH.

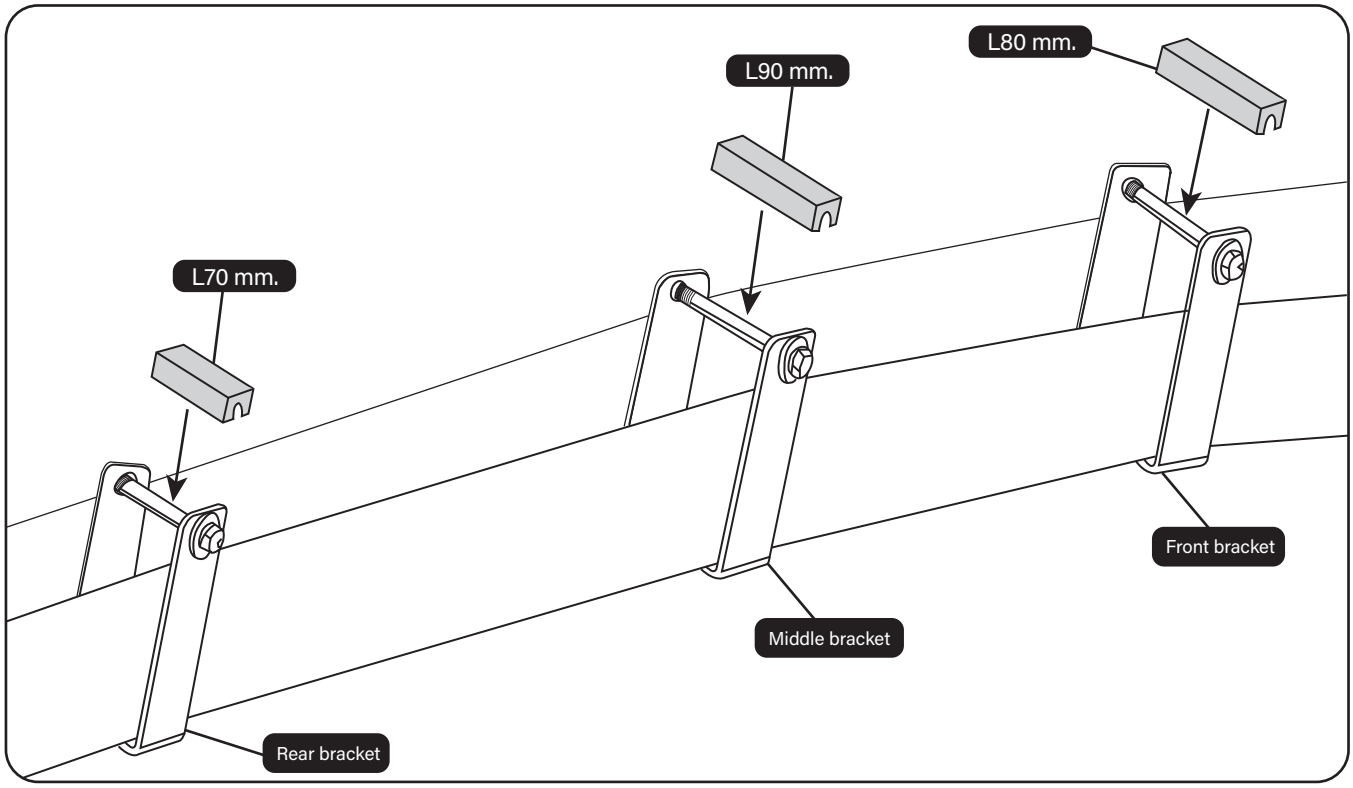


4. After tightening the bolts, apply the above specified length rubber insulator over the bolts.

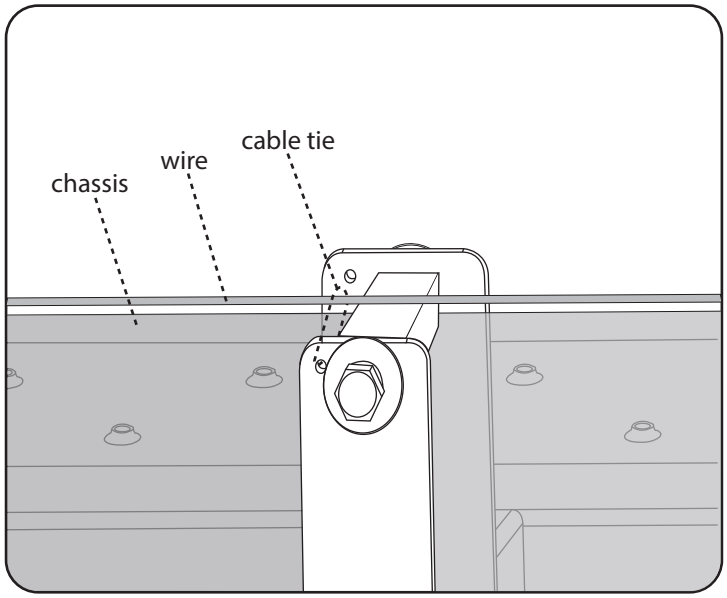


5. Use cable ties to bundle the wires together and then use scissors to cut off the excess both LH and RH.

Check and inspect the rock slider to ensure that it's installed correctly and securely tightened.




Rock Slider by PEAK

www.peak4x4.com.au info@peak4x4.com.au