This Product Must Not Be Modified | Approx Install Time: 4Hrs

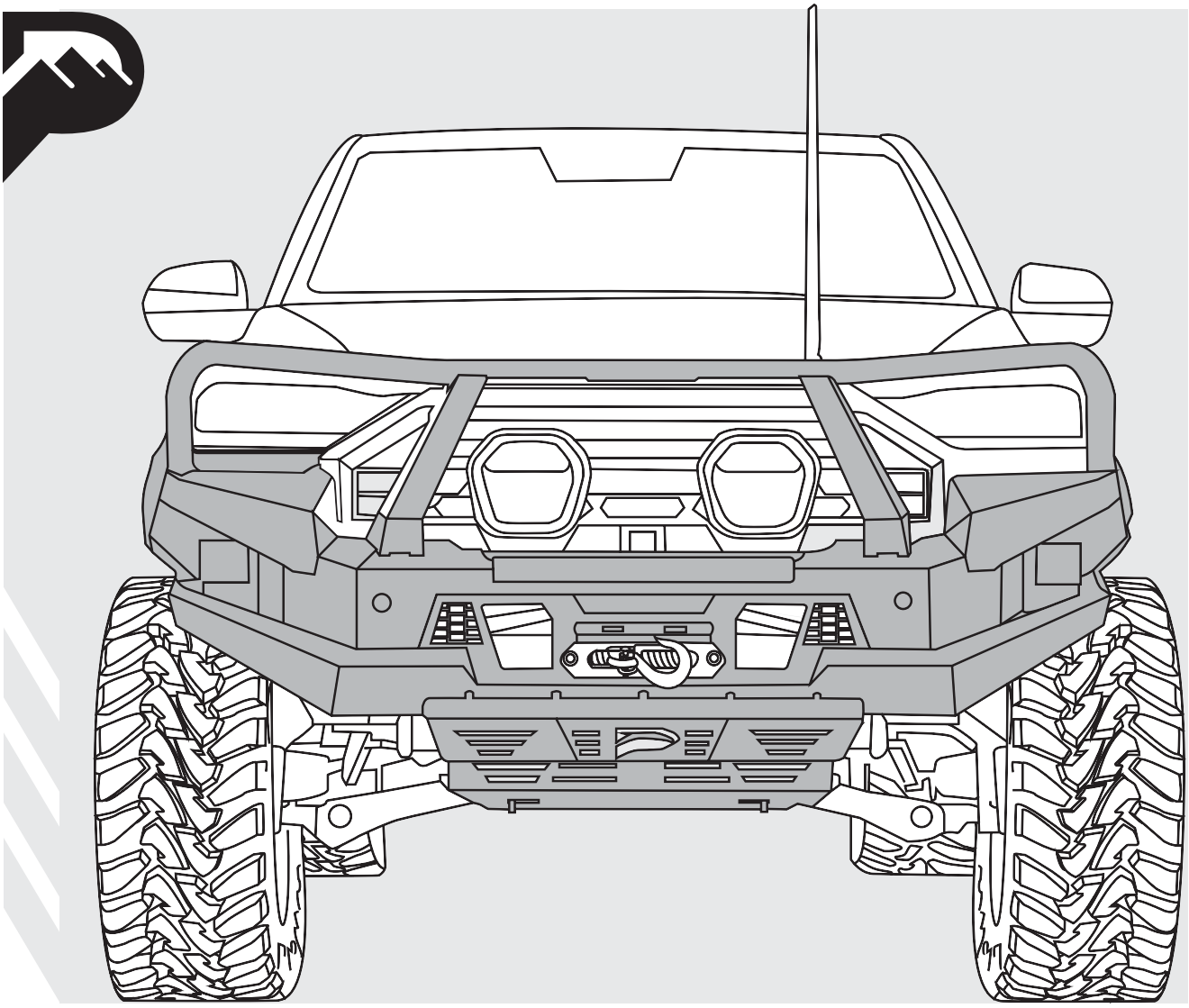

PEAK R1 NIGHTHAWK

Installation Manual

SsangYong Rexton Y450/Y461 & Musso Q261 Ultimate (Radar/No Radar)

No Loop SYPEAK0523S / Single Loop SYPEAK0525S / Triple Loop SYPEAK0527S

IMPORTANT :

Bull Bar installations should only be done by a qualified person and it is the responsibility of this person to ensure correct fitment

DISCLAIMER

Important Notice Regarding Installation and Warranty

Thank you for choosing the PEAK R1 NightHawk. This manual contains essential instructions for proper installation and usage. It is of utmost importance that you carefully read and follow these guidelines. Additionally, we want to emphasize the critical role of experience and expertise in installing this bull bar correctly.

Experienced Installation

Installing a bull bar requires a certain level of technical skill and knowledge. We strongly recommend that the installation be carried out by a qualified professional who has experience with vehicle modifications and bull bar installation. Incorrect installation can lead to safety hazards and vehicle damage.

Voidance of Warranty

Please be aware that improper installation, use of unauthorized parts, or installation by unqualified individuals can void the warranty of the bull bar and associated components. Any damage resulting from improper installation or use will not be covered under warranty.

Liability and Responsibility

We, the manufacturer, cannot be held responsible for any damage, injury, or loss caused by improper installation, modification, or usage of this product. It is the responsibility of the installer and the vehicle owner to ensure that installation is conducted according to the instructions provided in this manual.

Safety First

Your safety and the safety of others on the road are paramount. If you are not confident in your ability to install the bull bar correctly, or if you lack experience in vehicle modifications, we strongly recommend seeking assistance from a certified professional.

Professional Installation Recommended

To ensure optimal performance, safety, and warranty coverage, we strongly advise having your bull bar installed by a qualified technician who is knowledgeable about bull bar installations and adheres to industry standards.

By proceeding with the installation of this bull bar, you acknowledge that you have read and understood this disclaimer, and you accept full responsibility for the installation process and its outcomes.

If you have any questions or concerns, please contact our customer support team before proceeding.

Thank you for choosing our product, and we appreciate your commitment to safety and quality installation.

SAFETY PPE

 **Ear Protection**	Always wear ear protection when using power tools.
 **Safety Glasses**	Ensure eye protection is always worn when cutting or drilling.
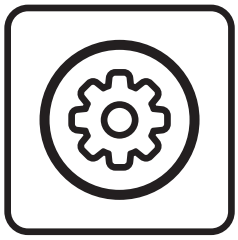 **Manual Handling**	Do not attempt to lift bar assemblies or rock sliders on your own. Always use two people to lift or use a mechanical lifting aid such as hydraulic lifting trolley.
 **Vehicle Support**	Always ensure the vehicle is properly supported when working on it. Do not attempt to fit products whilst suspension work is being carried out. Do not work under a vehicle supported only by a jack.

TOOLS

Hacksaw	Ratchet	Socket Set	Spanner Set	Masking Tape
Soldering Iron	Side Cutters	Wire Strippers	Philips-head Screw Driver	Rust Resistant Paint

SUPPLIED HARDWARE

Bull Bar x 01

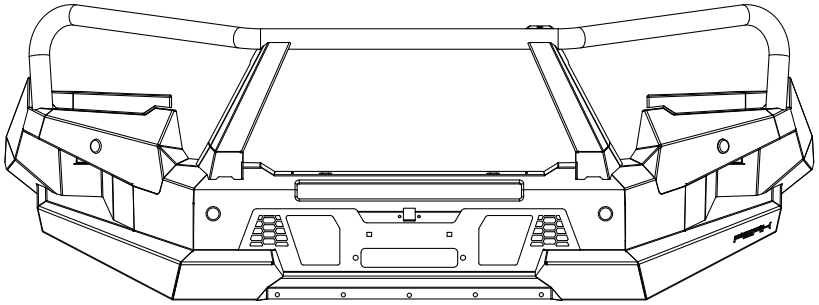

M12x40mm (6 Pieces)

Compliance Plate x 01

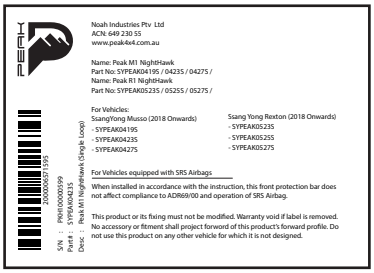

Warning Plate x 02

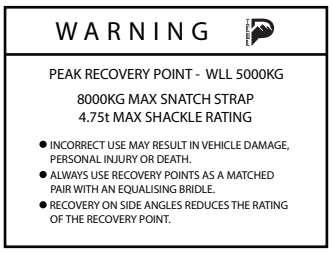

Chassis Mount x 02

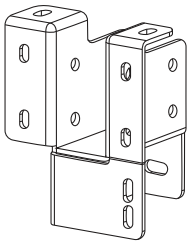

M12x120mm (10 Pieces)
Crush Tube Small (4 Pieces)
Crush Tube Large (2 Pieces)

Recovery Points x 02

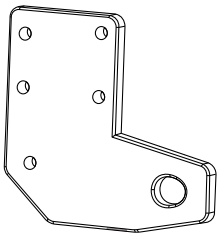

Centre Cradle x 01

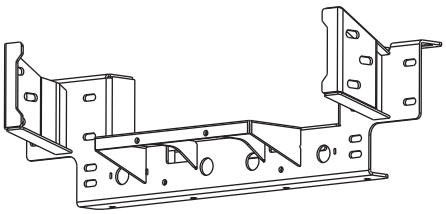

M10x40mm (16 Pieces)

Bash Plate 01 x 01

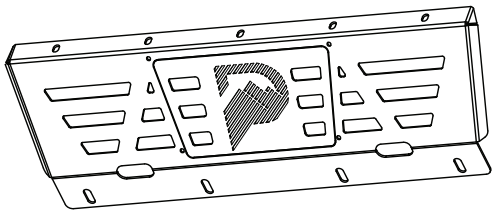

M8x30mm (9 Pieces)

Radar Cover x 01

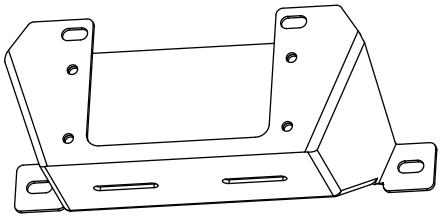

Bash Plate 02 x 01

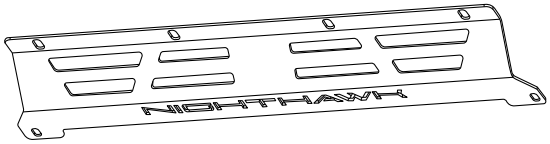

M8x30mm (2 Pieces)

Bash Plate 03 x 01

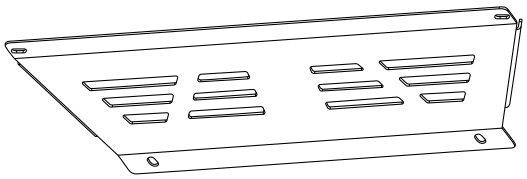

M8x30mm (2 Pieces)

Wing Support x 02

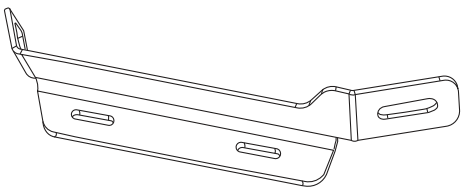

M10x40MM (2 Pieces)

Front Grill Bracket x 02



Number Plate Mount x 01

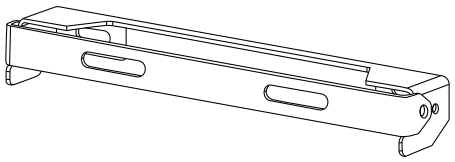

M6 Cage nuts (2 Pieces)
M6x35mm (4 Pieces)

STEDI C4 Cube Flood Light x 02

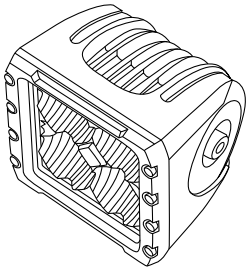

Leather Key Case x 01

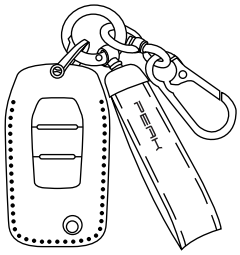

SENSOR MOUNTING KIT x 01

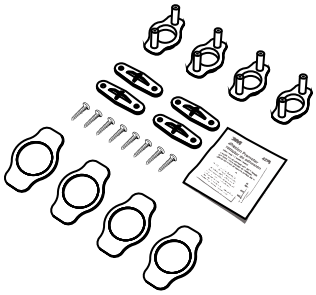

Headlight Infill Panel Style 1 (Rexton) x 02

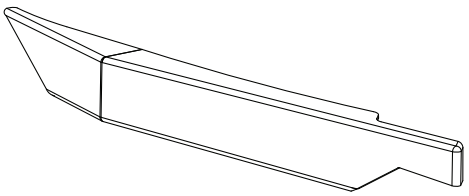

Headlight Infill Panel Style 2 (Musso) x 02

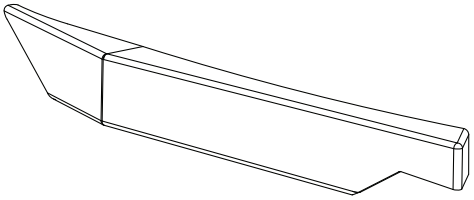

Wiring adapters and extensions x 01 SET



Part 1
Removal of Original Bar & Components

1. Open bonnet and remove all screw pins holding on the front cowling in engine bay. Fold back on the rubber seal and place up the engine bay out of the way.

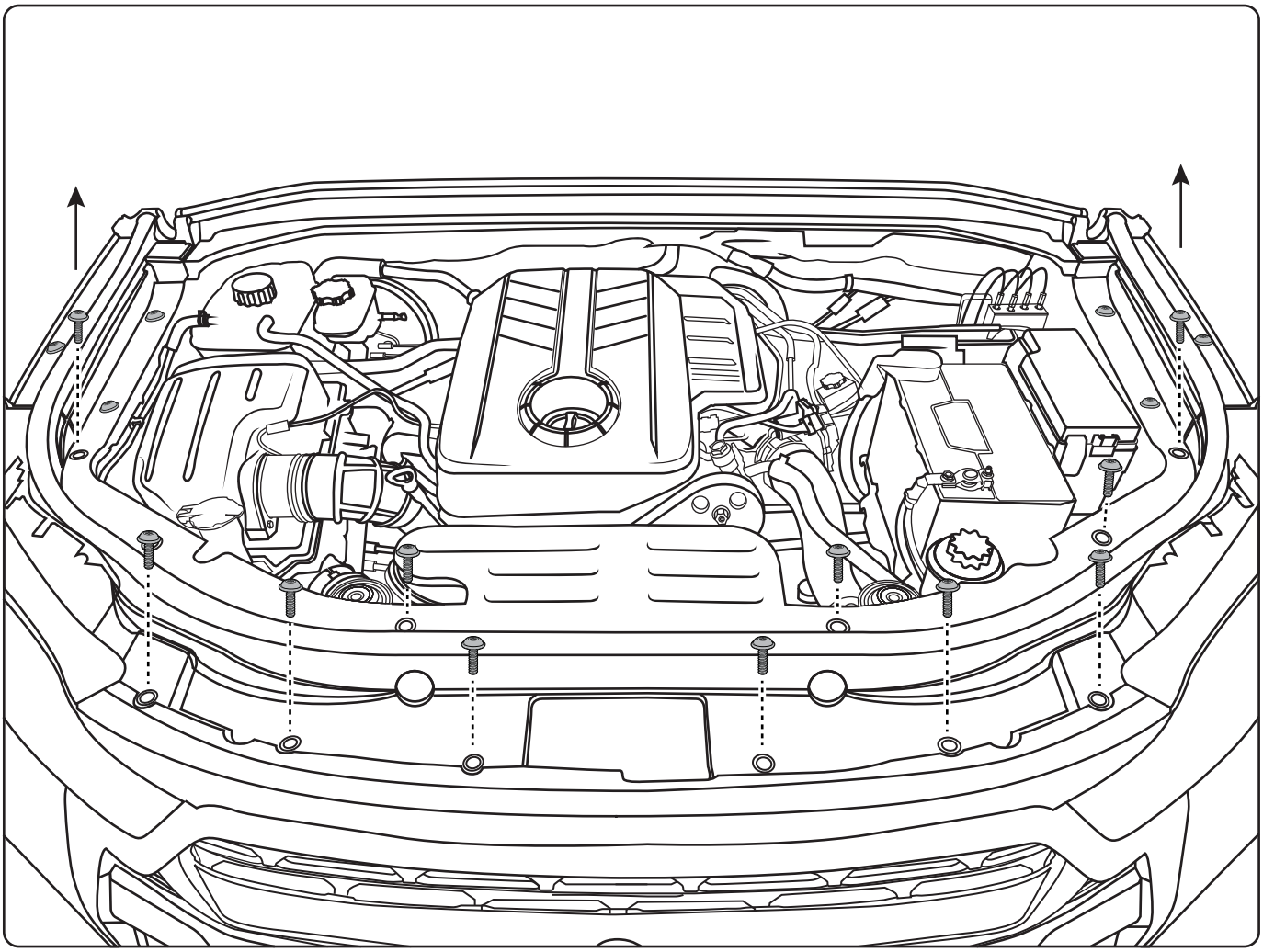

Make sure to retain all original screws & bolts as some are to be repurposed for the install of this product.

2. Remove screws on top of the grill. (Under cowling).

3. Moving to the front wheel arch, remove screws from the inner splash guard on the bumper portion down the inside of the wheel arch and underneath. Repeat for the other side.

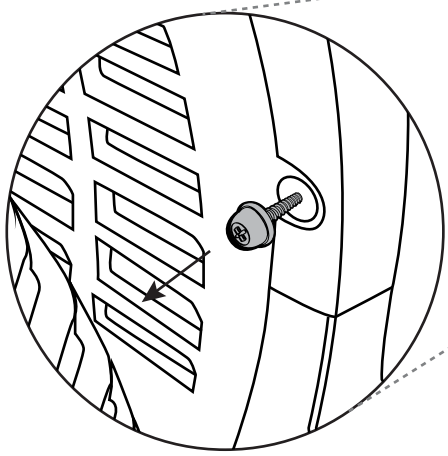

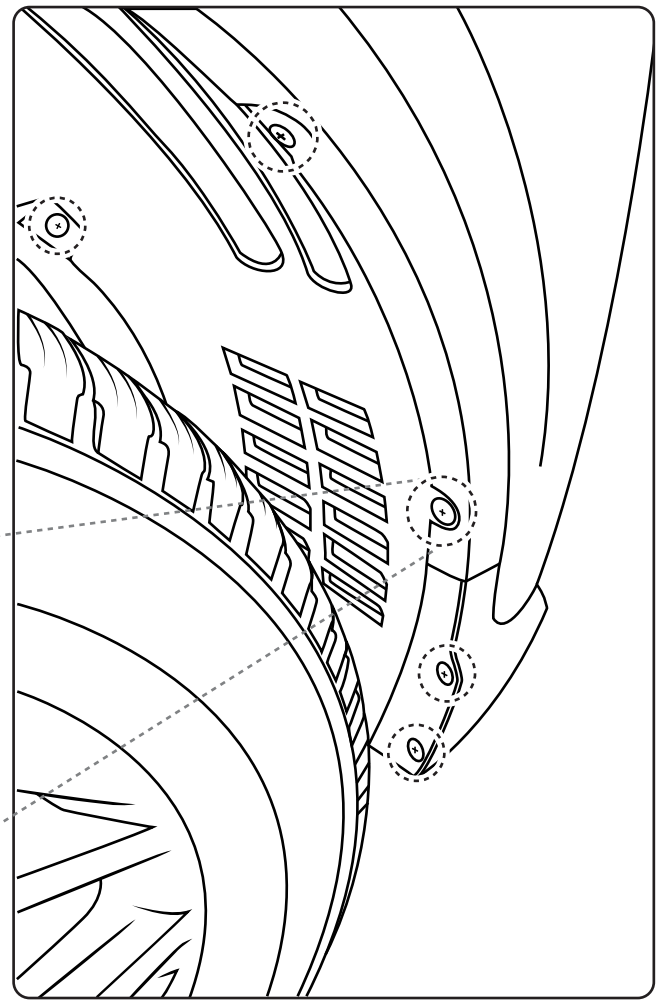

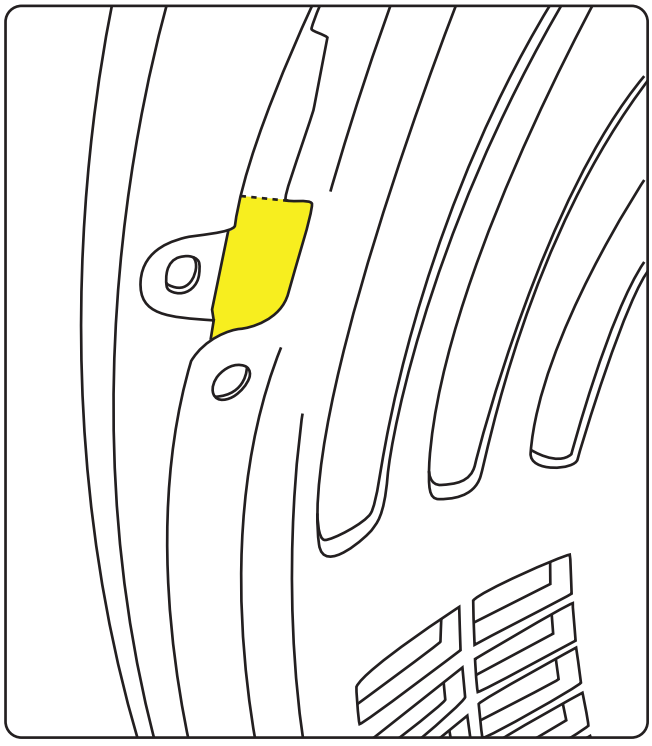

4. Locate the hole in the splash guard where the quarter panel and the bumper meet. Using a Philips head, remove the vertically positioned retainer screw. Repeat for the other side.

5. Remove factory bash plates.

6. Once all screws are removed pull bumper off starting from one side. Once bar releases itself, keep close as the wiring harness is still connected. Unclip the front bar wiring loom connection located on the passenger side. Unclip the Camera loom located on the drivers side. Remove the front bar from the front of the car and place on a stand.

7. Once bumper bar is removed from the vehicle unclip wiring harness from the bar and set aside.

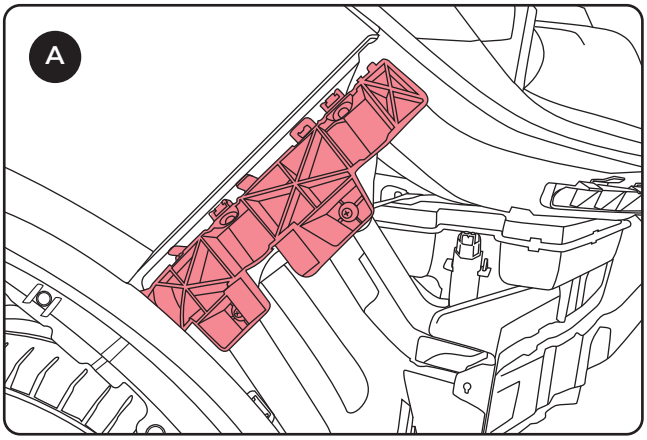

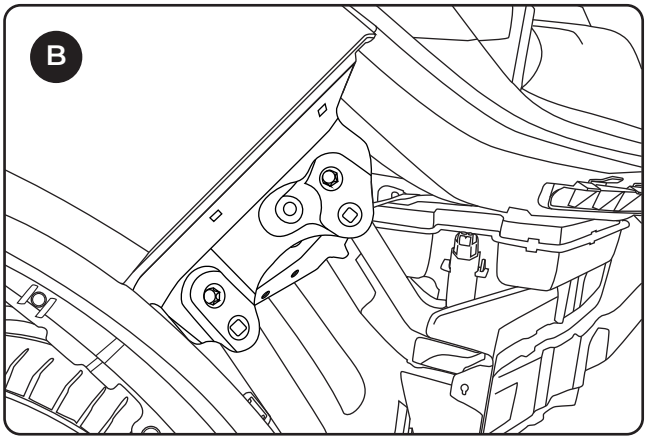

8. Using a Phillips head screwdriver remove plastic bumper retaining brackets from the quarter panels on both sides.

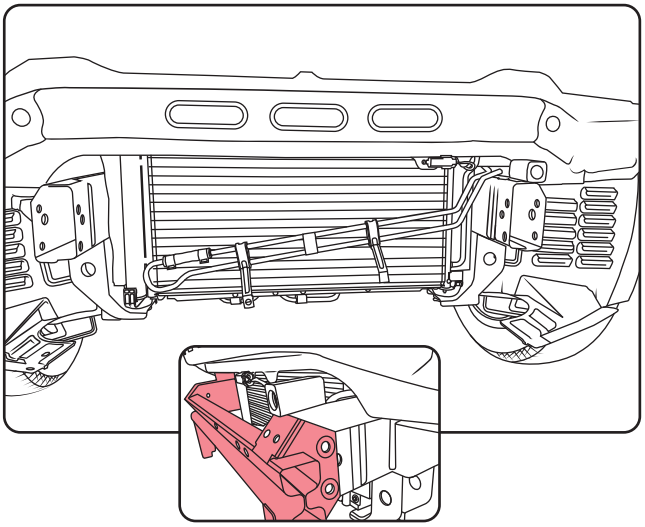

9. Unbolt power steering cooler lines from center reinforcement.

10. Unbolt and remove center reinforcement.

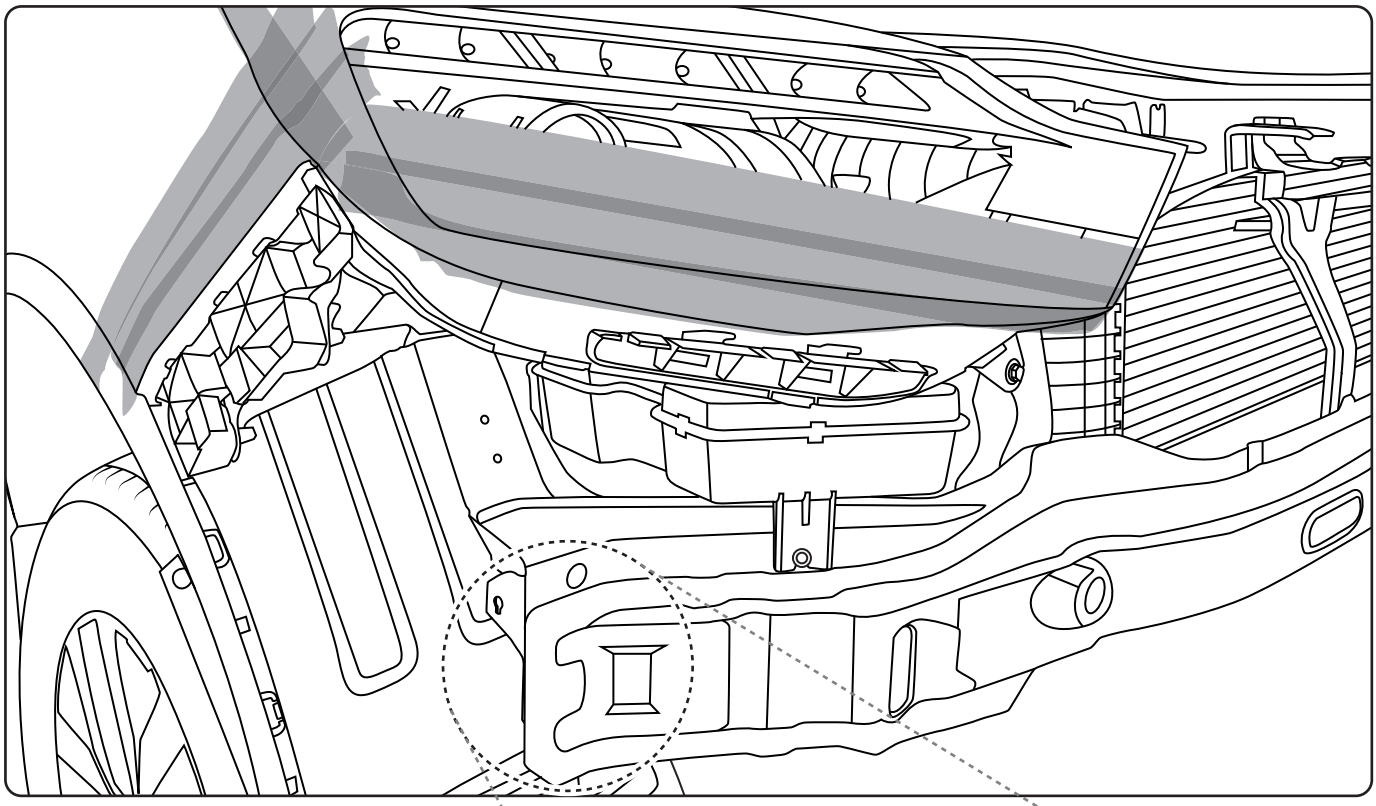

11. To prevent any damage during the bar installation, take precautionary measures by taping up the headlights and quarter panels.

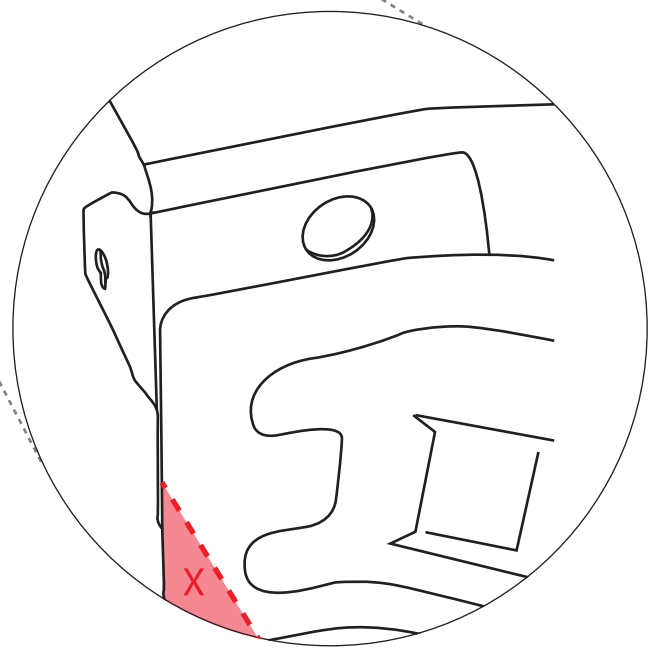

12. Trim body panel as per photo and cover exposed areas with epoxy based rust resistant paint.

13. Remove all four sensors and the front camera; set them aside. If equipped, also remove the forward-facing radar module.

14. Unclip grill from bumper bar and tape along cut line.Cut grill along cut line with air hacksaw and clean up cut edges.

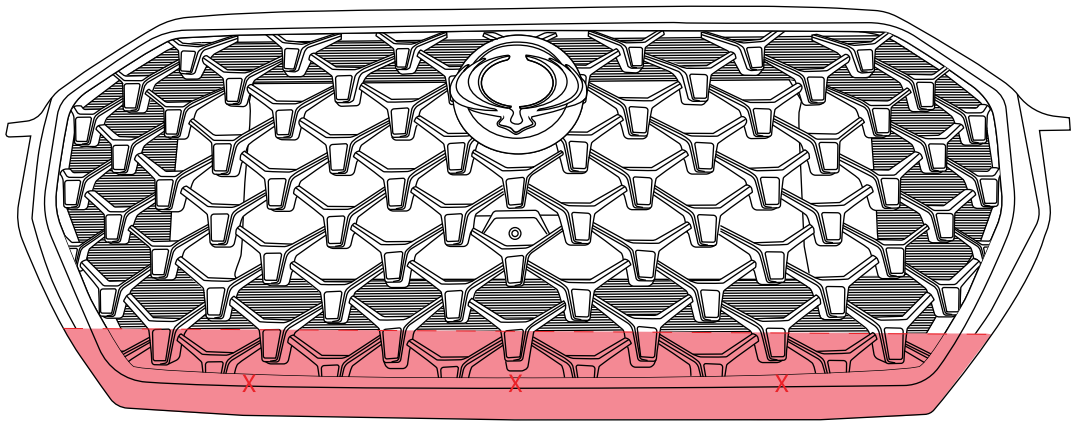

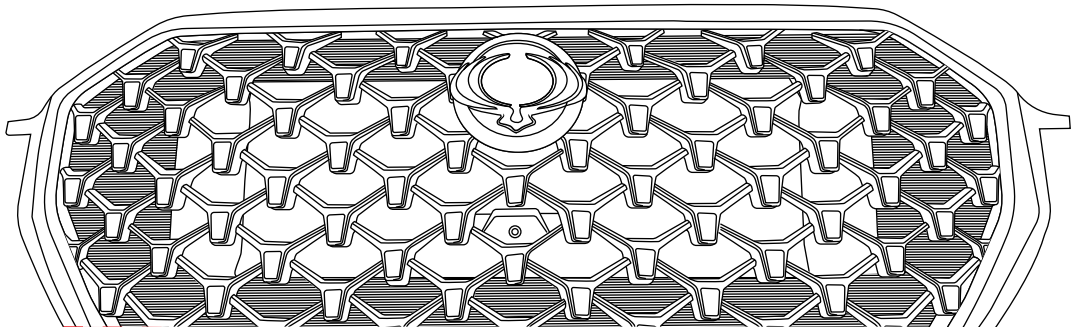

15. Wrap tape around the bumper along the cut line. This section will serve as a support for the grille, which will be reattached to the vehicle. Cut bumper along cut line with air hacksaw and clean up cut edges.

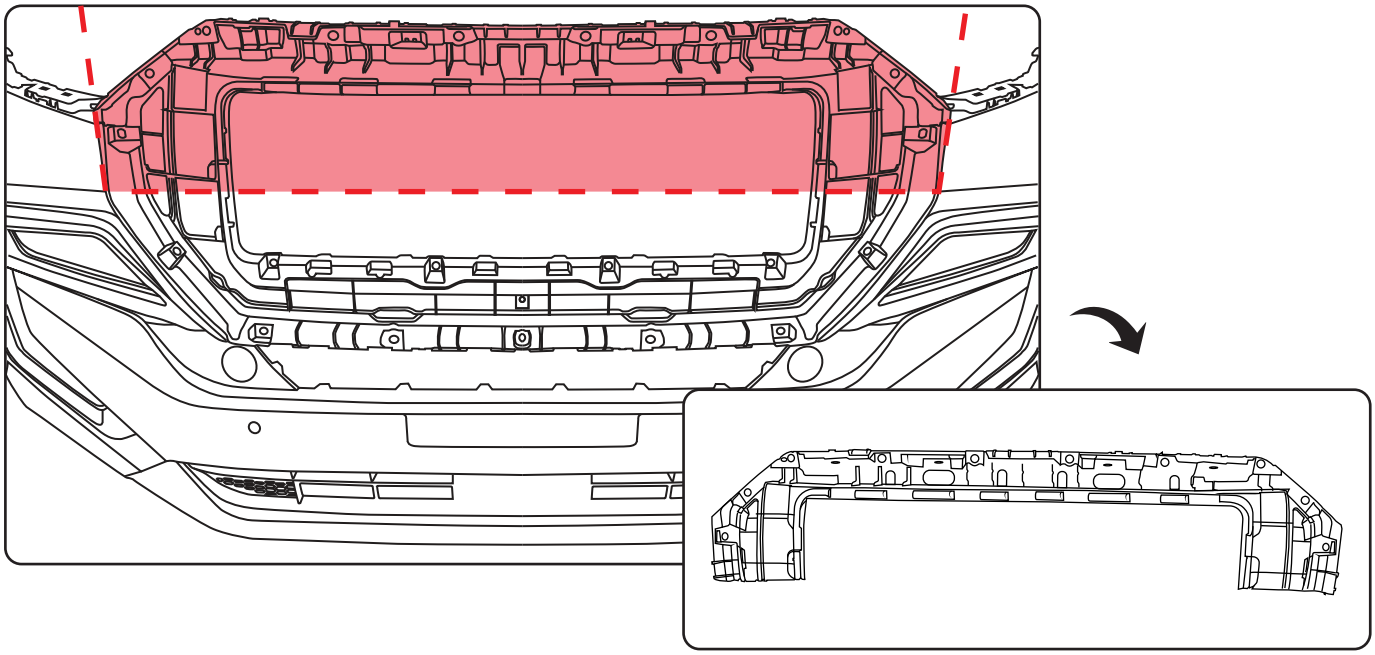

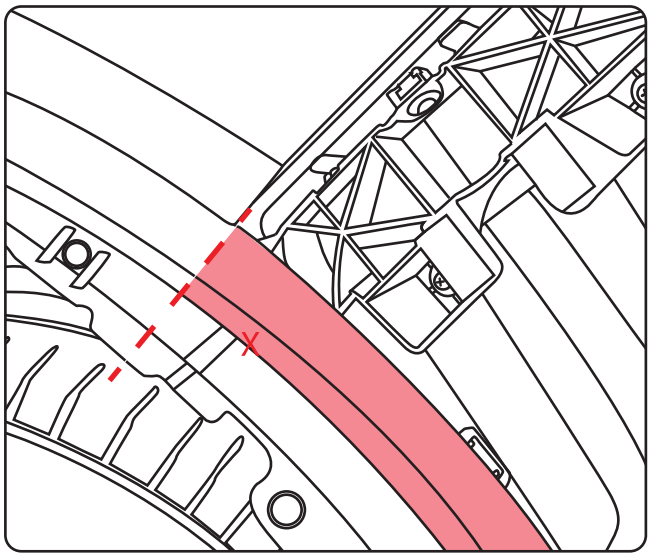

16. Tape up plastic wheel arch garnish and trim flush with the end of the quarter panel.

Consider painting the quarter panel and the lower section of the headlights black in order to conceal the gap between the panel and the bumper.

Part 2
Bull Bar Preparation

1. Affix

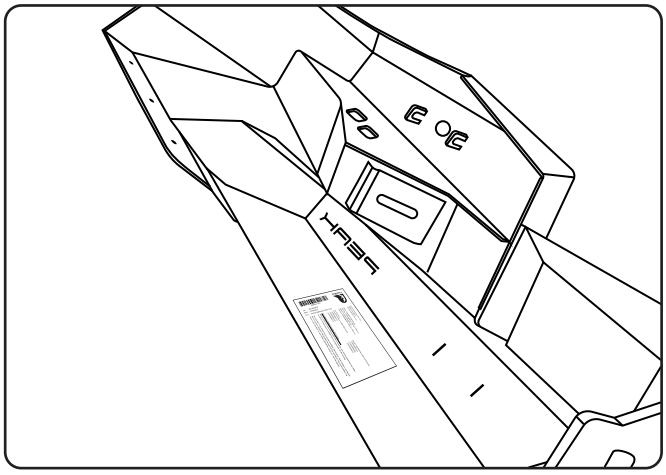

1x Compliance plate on the passenger side bottom panel inside the bull bar. Note serial number and keep for your records.

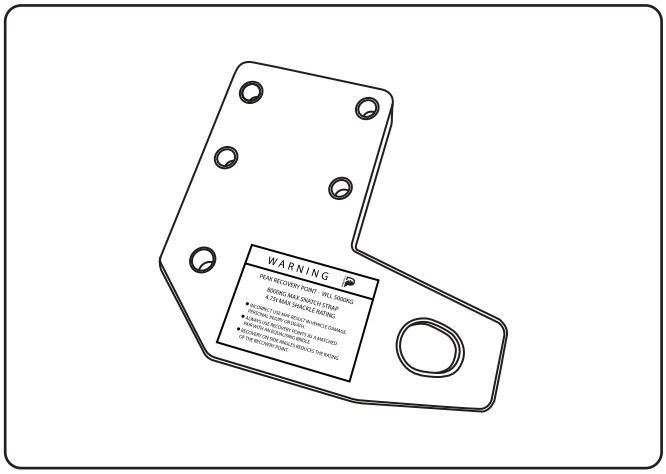

2x recovery point warning labels on the outer side of each recovery point.

Warranty will be voided immediately if the compliance plate and two warning labels are not correctly applied and installed in their designated positions.

2. Install STEDI fog lights to bar. Please refer to diagram for correct bolt placement.

SINGLE DAMPENER

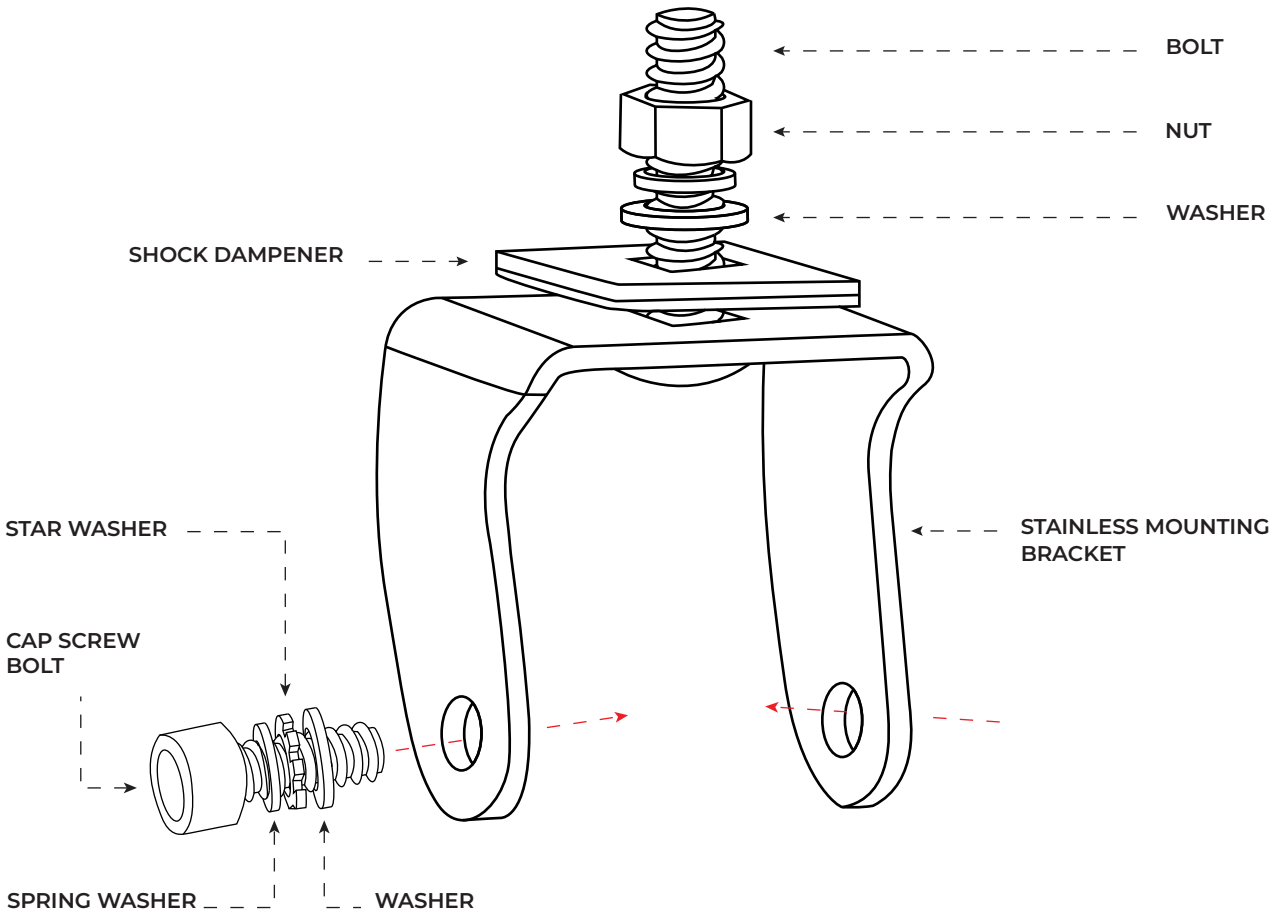

Be sure to face the rubber isolator plate with the rubber facing down.

3. Install the front camera onto run factory parking sensor and camera loom to the front bumper using two BHSC M5x15 mm screws, and tighten securely.

FRONT CAMERA INSTALLATION

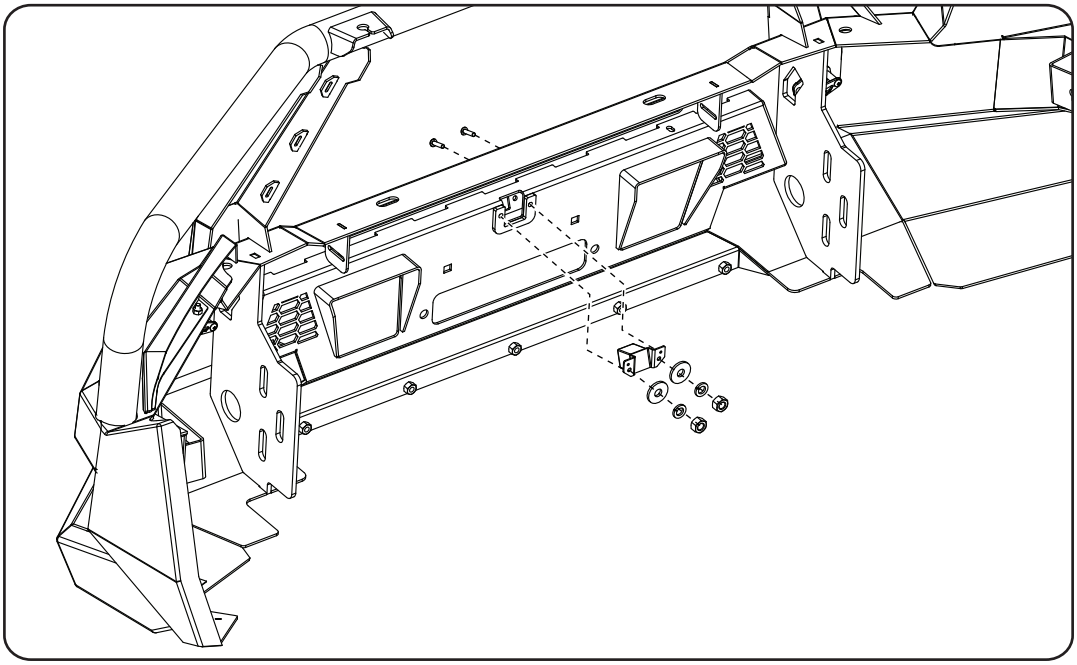

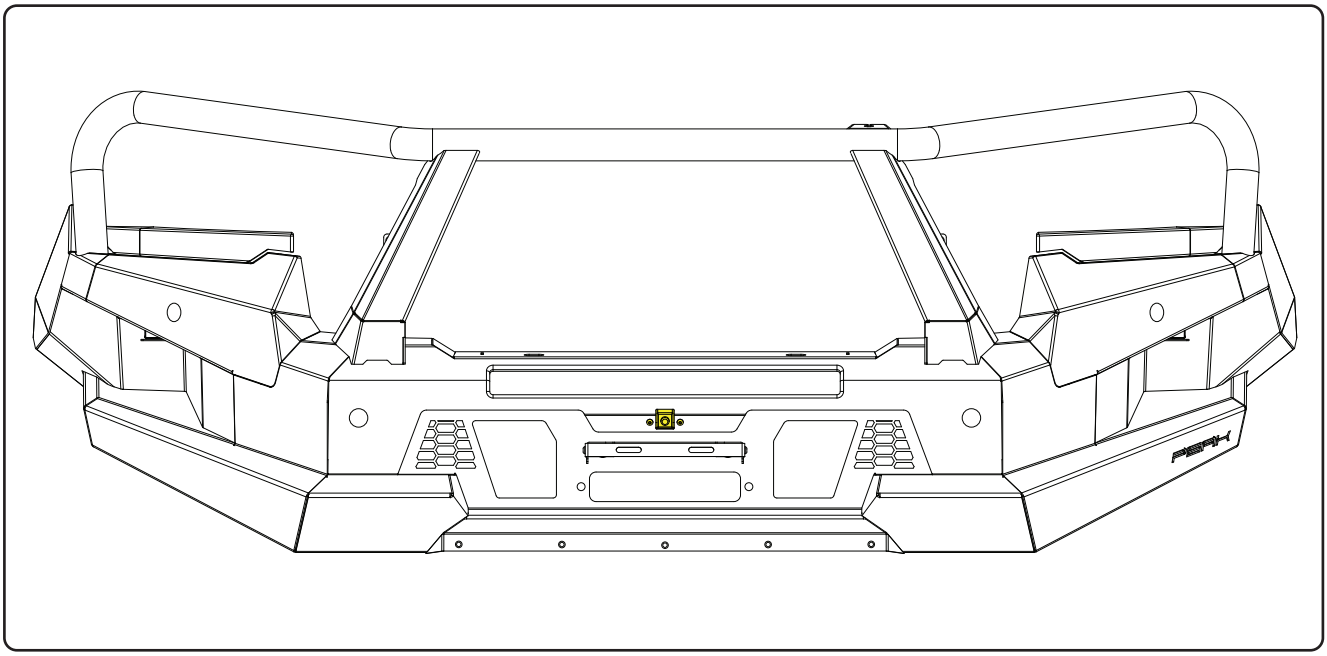

In case you discover that the sensor wiring is insufficiently long, utilize the provided wire extensions to elongate the sensor cable.

4. Using the sensor mounting kit, follow these steps:

a. Begin by pushing out the centre holes of the base plate. Position the sensor, then secure the backing plate using the supplied screws.

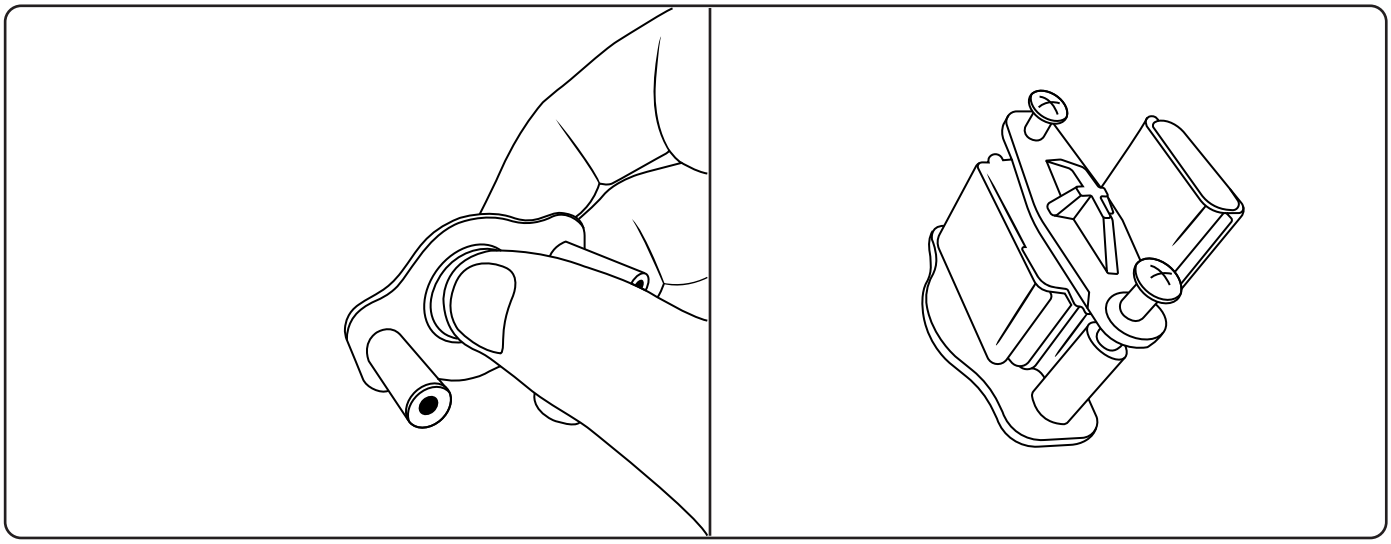

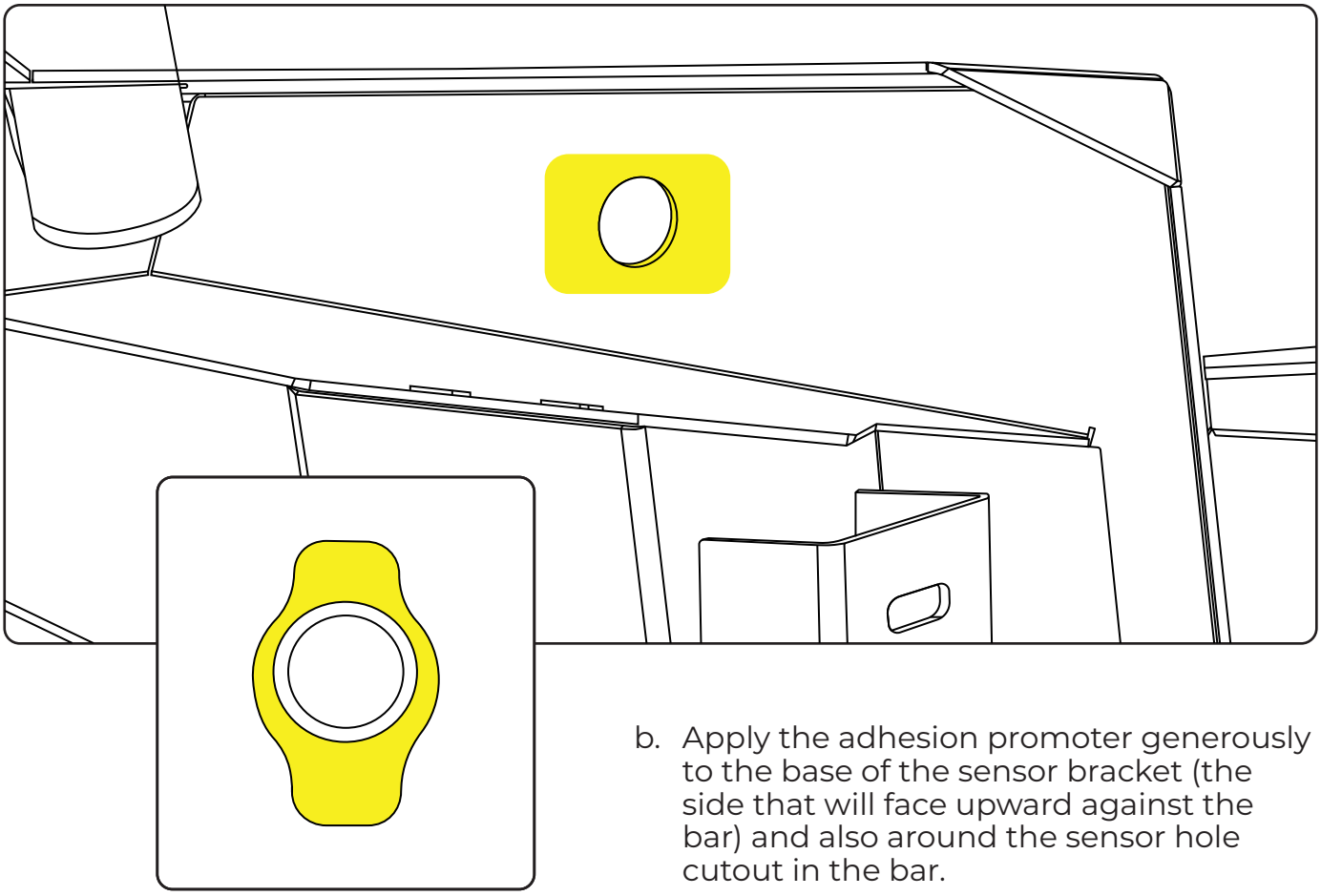

b. Apply the adhesion promoter generously to the base of the sensor bracket (the side that will face upward against the bar) and also around the sensor hole cutout in the bar.

c. Affix the double-sided tape to each sensor bracket's base plate.

d. Firmly place the brackets into position.

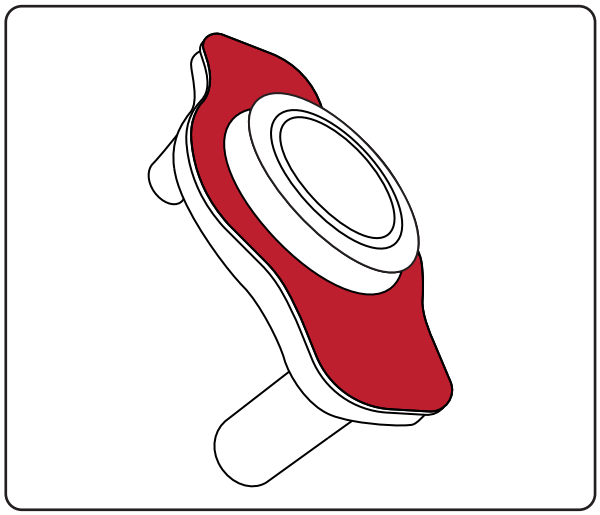

Make sure that the sensors brackets are oriented vertically.

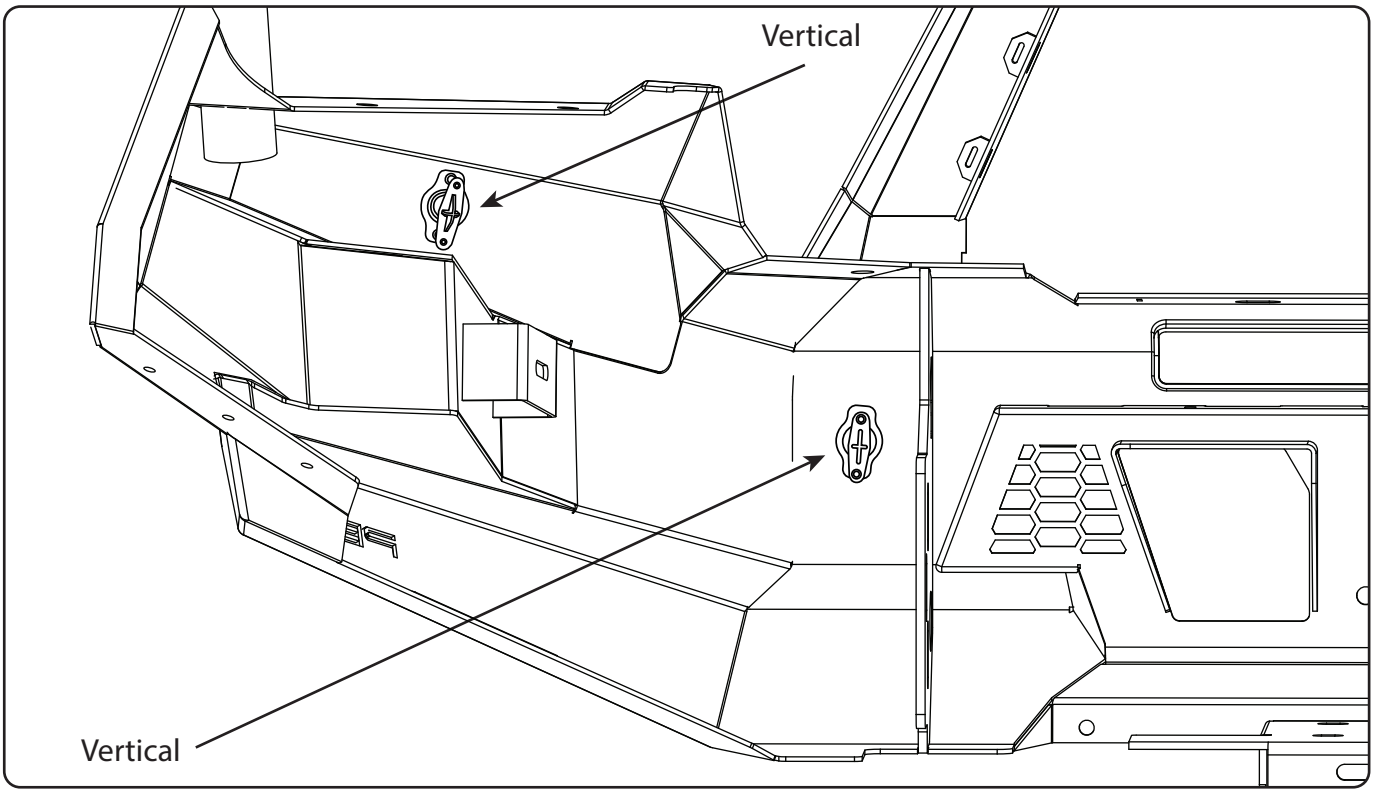

5. Connect wiring harness to each sensor and camera.

6. Install the STEDI fog light harness by splicing & connecting it to the factory fog light wiring harness. Please note that the third wire on the factory harness is unused and serves as the trigger when the turn signals are activated. This feature will be disabled during the installation process.

7. Install wing support brackets to bulbar using 1x M10x40mm Nuts bolts and washer.

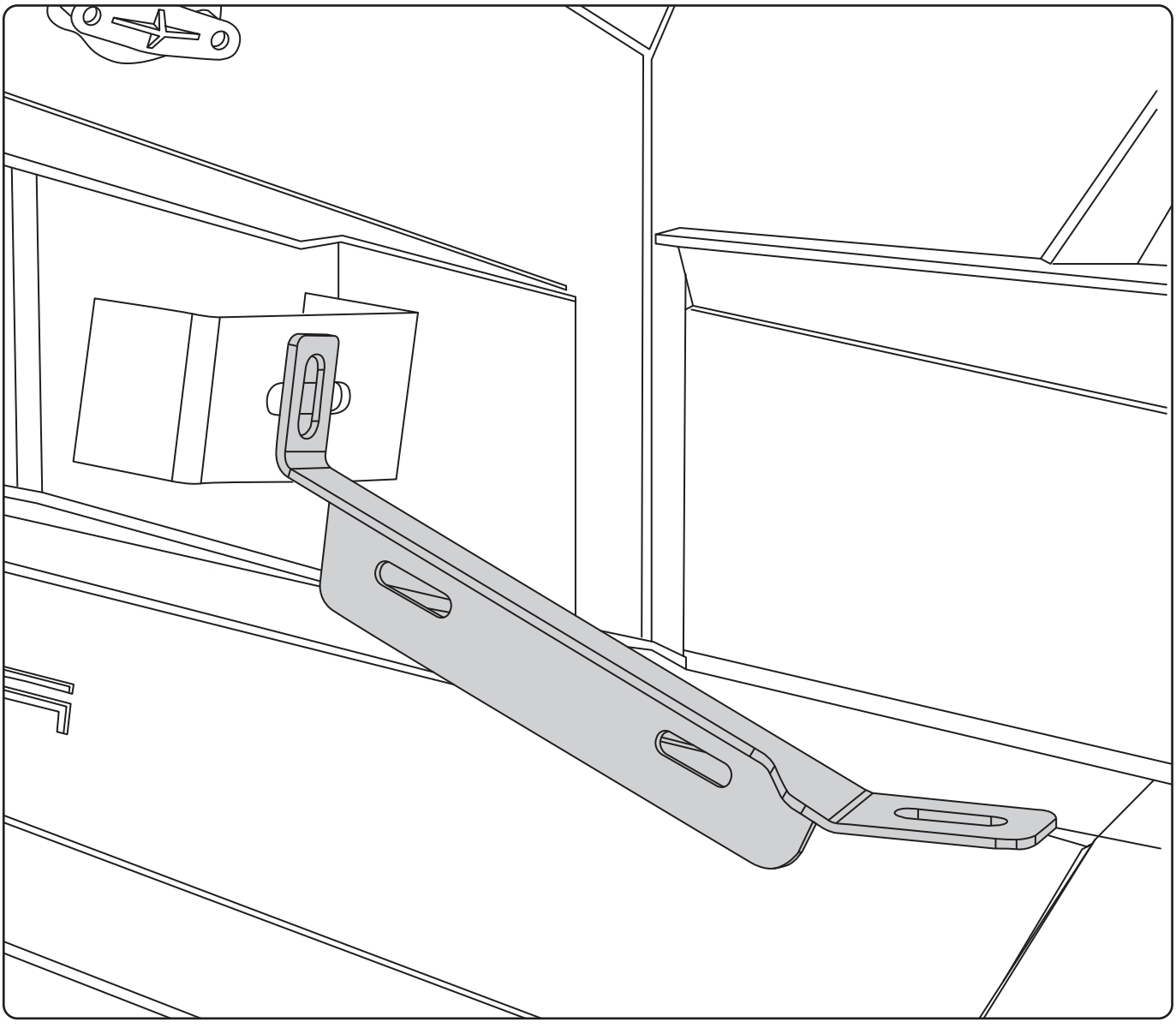

8. Install 2x M6 Cage nuts in centre for number plate bracket. Affix base plate of number plate bracket to bar using 2x M6 bolts.

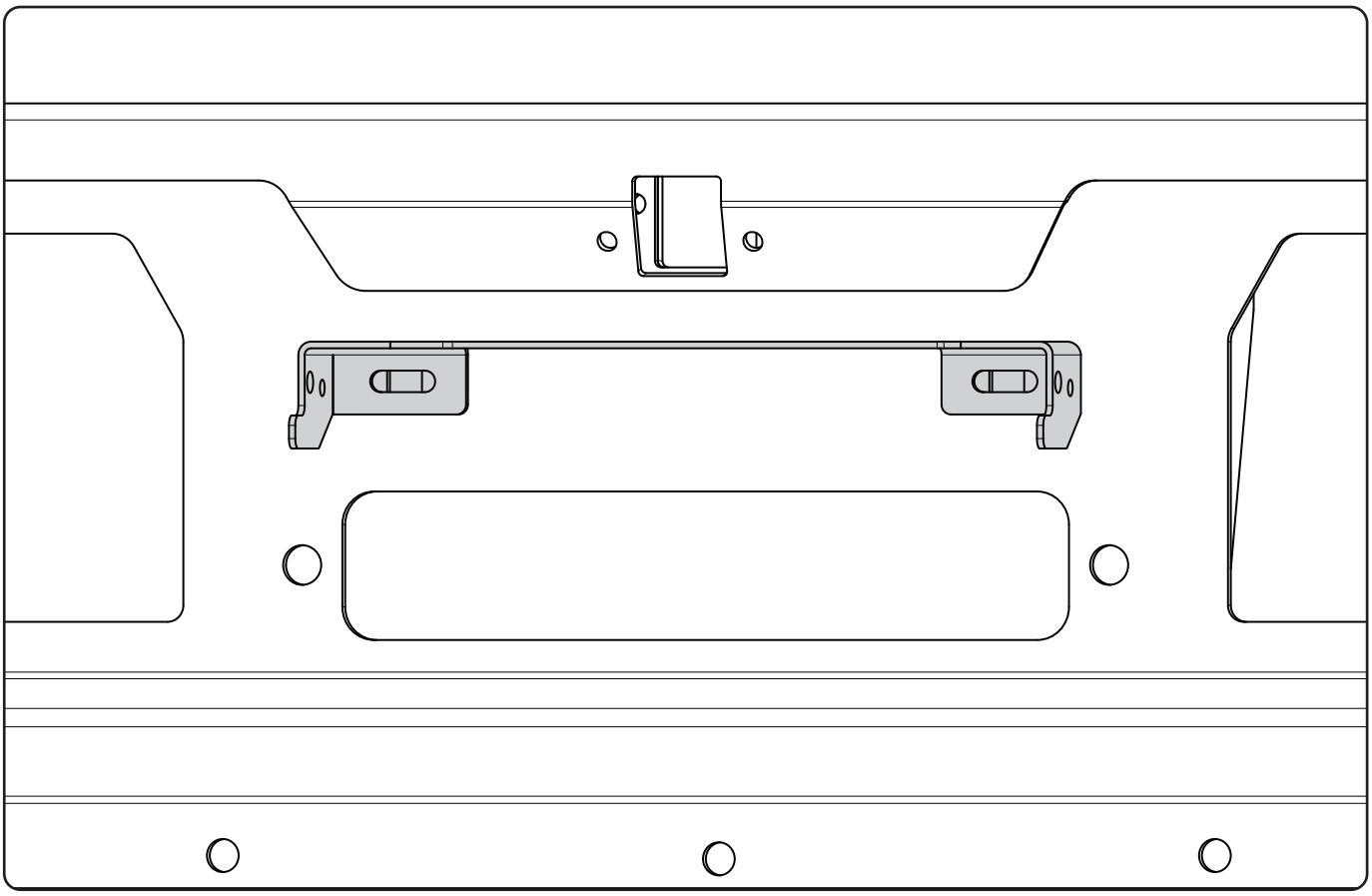

If you plan to install a light bar or spotlights, this is the appropriate moment to do so. In case you're installing both spotlights and a light bar simultaneously, ensure that you trim the spot light bolts, as there is limited clearance available.

Part 3
Bull Bar Installation

1. Tape up headlights and quarter panels to prevent damage when installing bar.

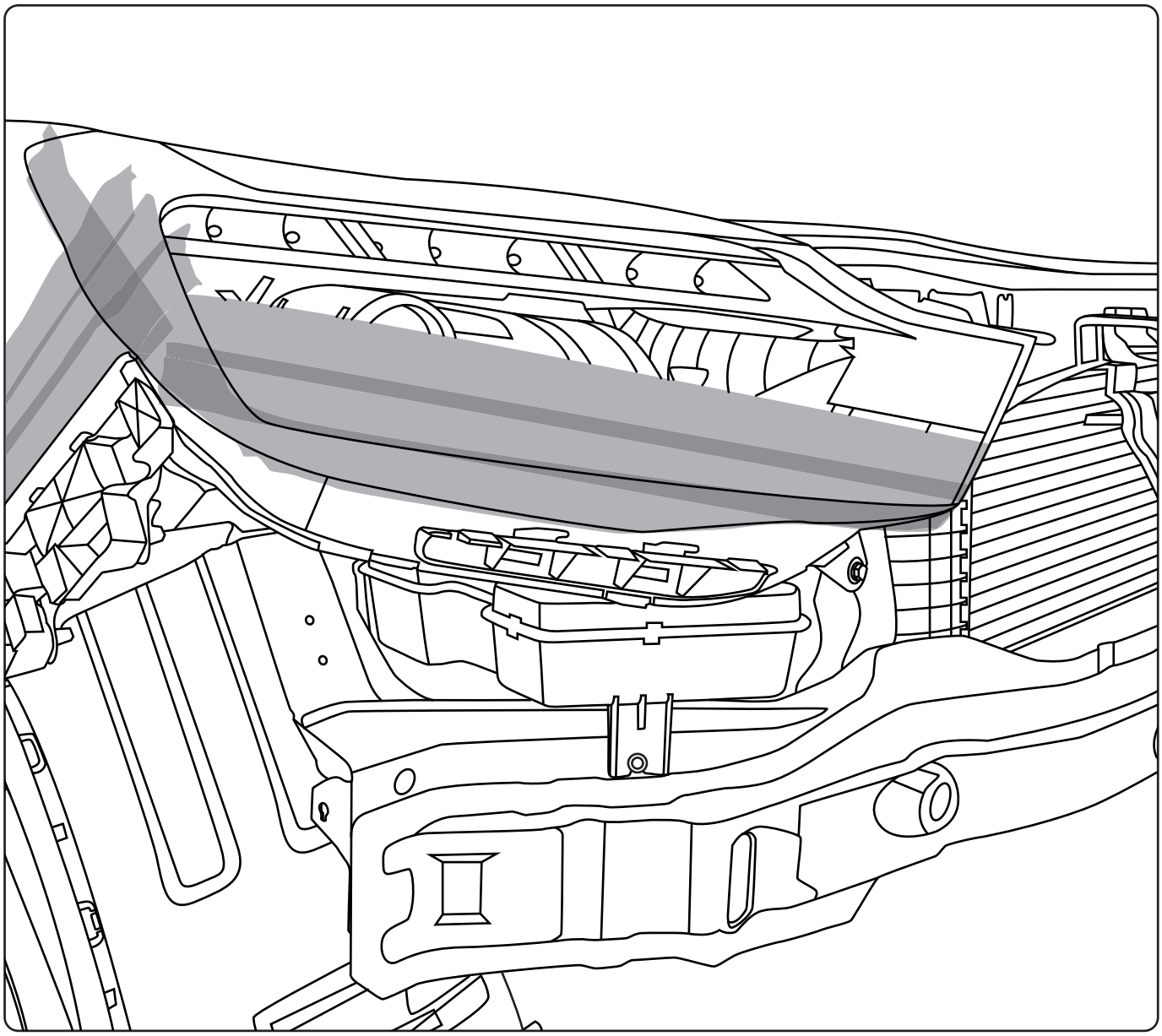

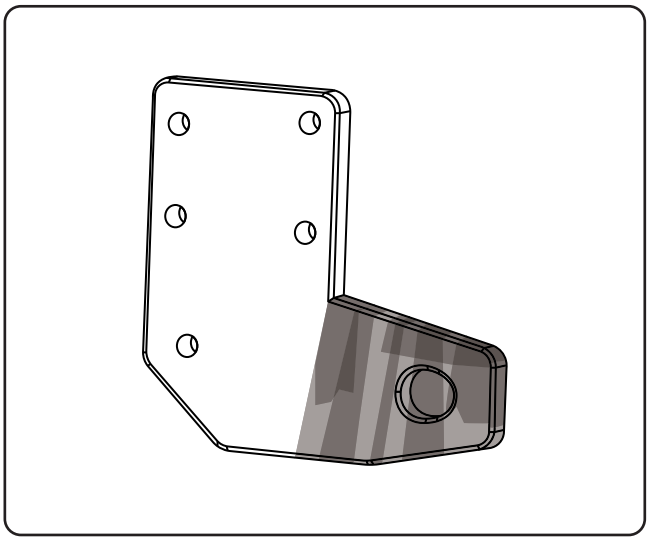

2. Tape up recovery points on chassis mounts before mounting to vehicle.

3. Affix top part of grill bracket to the bottom headlight screw.

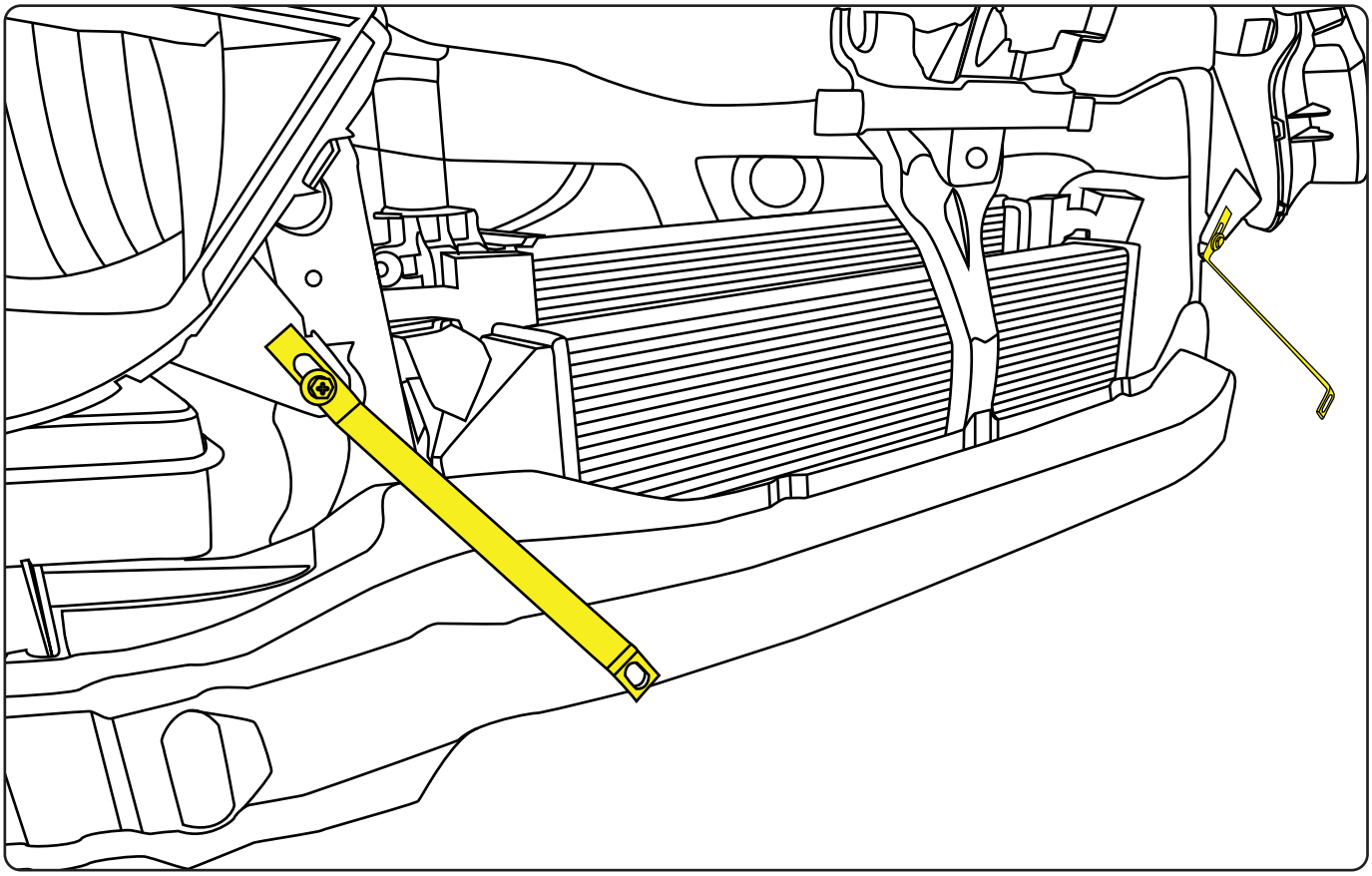

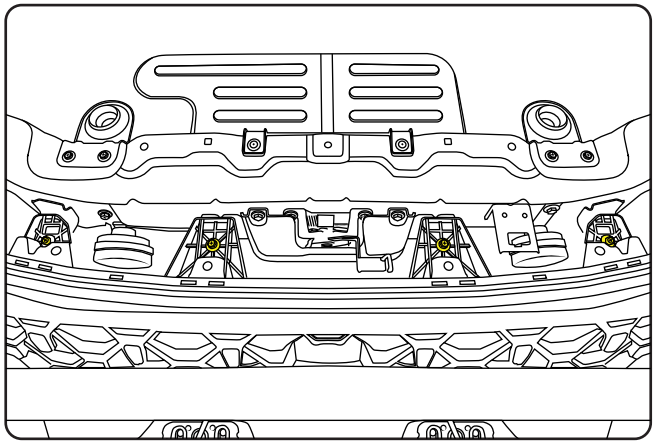

4. Attach the grille to the backing support and fasten it back onto the vehicle's body using the four original upper mounting points.

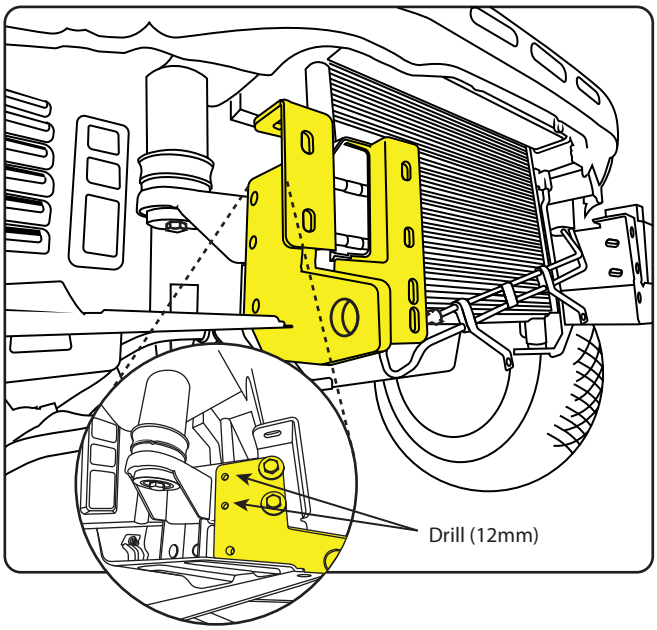

5. Begin by temporarily mounting the chassis brackets using the front two bolts and lower chassis mount point. Mark the locations for the rear bolt holes. Then, remove the chassis bracket and drill holes of 12mm diameter in preparation for the final installation of the chassis bracket and recovery point.

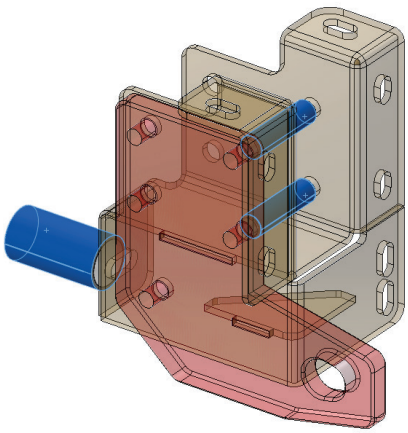

6. Mount 2x chassis mounts & recovery points to front of chassis using 8x M10x120mm bolts, small crush tubes for the front bolts and tighten. Additionally fasten the final lower point using a M10x50mm bolt.

7. Retain lower chassis mount point using supplied large crush tubes and M12x120mm bolts.

8. Install the winch cradle/bar mount to the chassis mount using 12x M10x40mm bolts, nuts and washers.

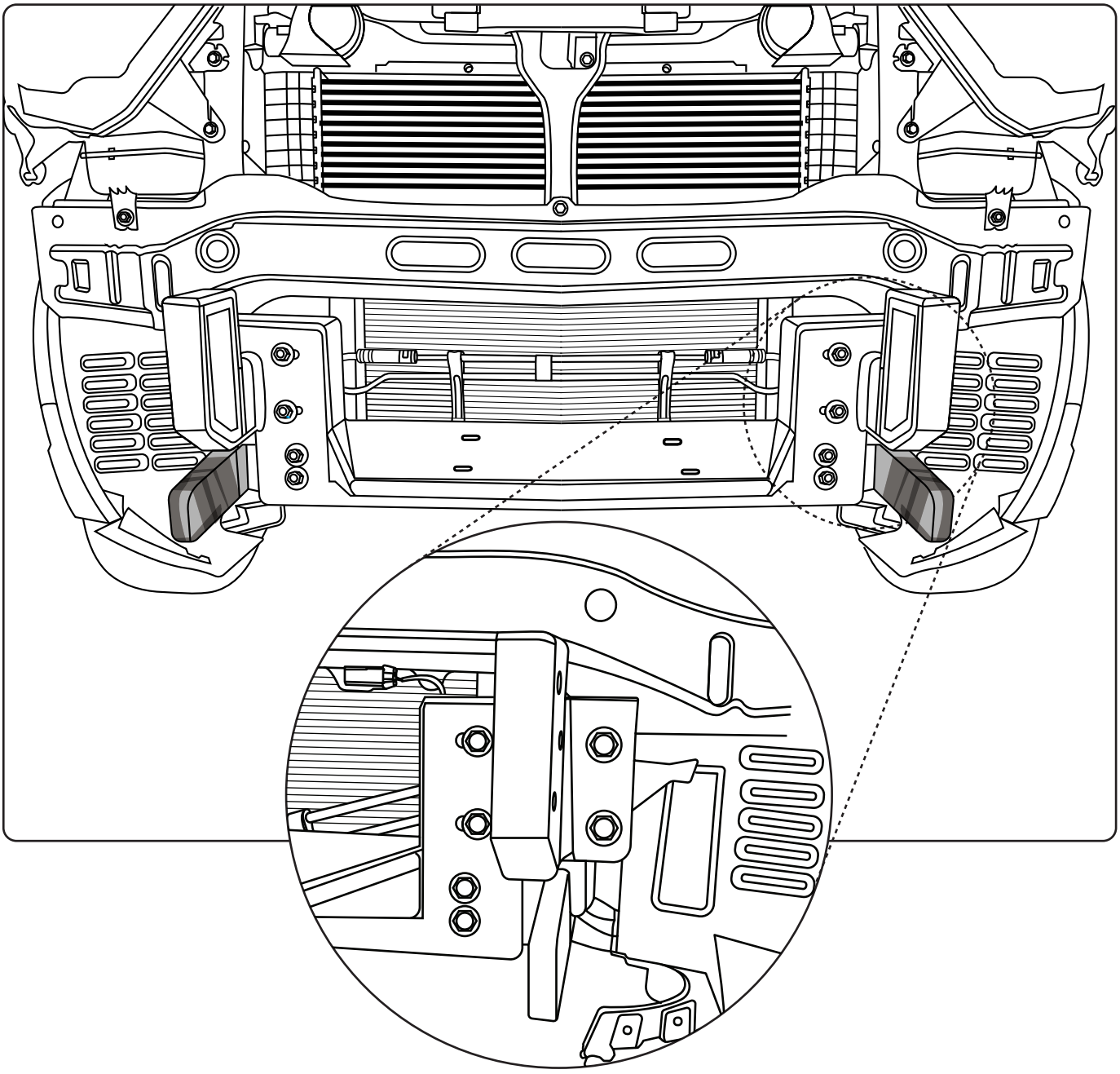

leave these bolts finger tight as cradle might need to be adjusted (left/Right) once the bar is on.

9. Using the original bolts, affix the power steering cooler lines to the winch cradle using the integrated brackets on the back side of the winch cradle.

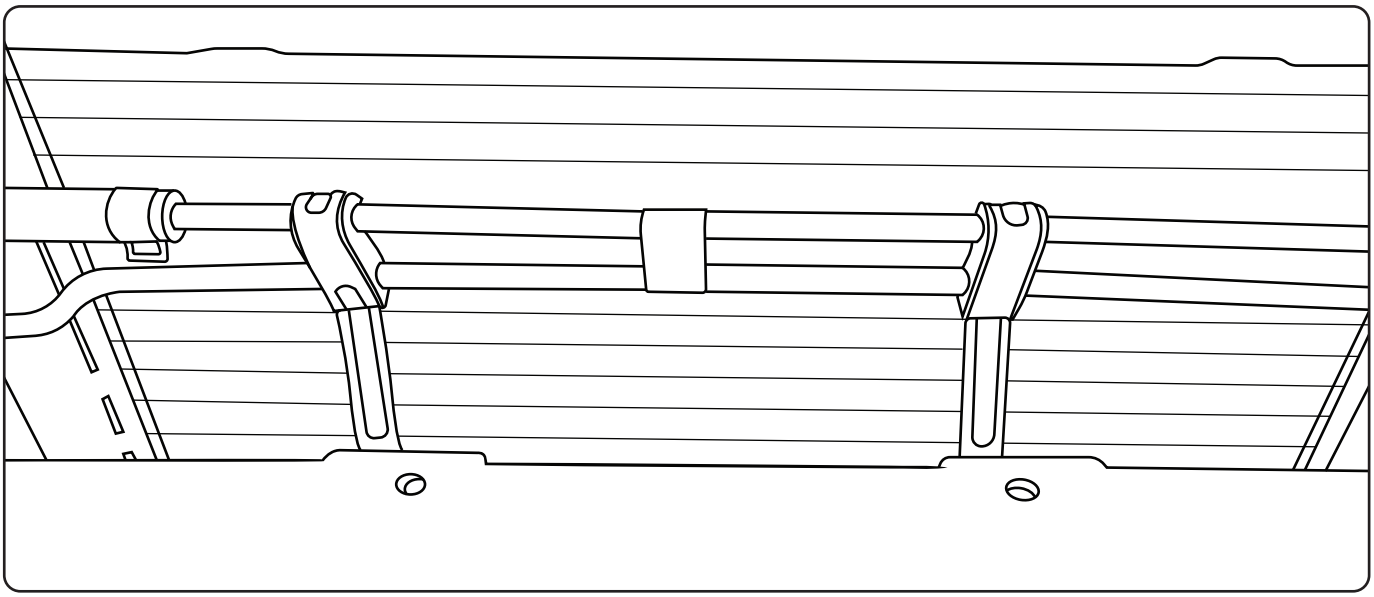

If fitting a winch install now and run all wires to battery following factory aircon lines.

10. With the help of another person slide the bar onto the chassis mount and install 3x M12x40mm bolts, washer and nuts per side to hold the bar in place (pictures below).

NOTE: As the chassis and the body move independently it is imperative to allow clearance between the bull bar and ANY body mounted parts/ faces. Ensure that:

- A minimum 15mm gap where the bar meets the quarter panel
- Adequate clearance from the bar and body mounted parts is retained

11. Once correct position is achieved tighten all 6 bolts.

12. Screw bottom grill bracket to grill mounting point from original inner sensor cradle using 2x Phillips head screws from parts bin.

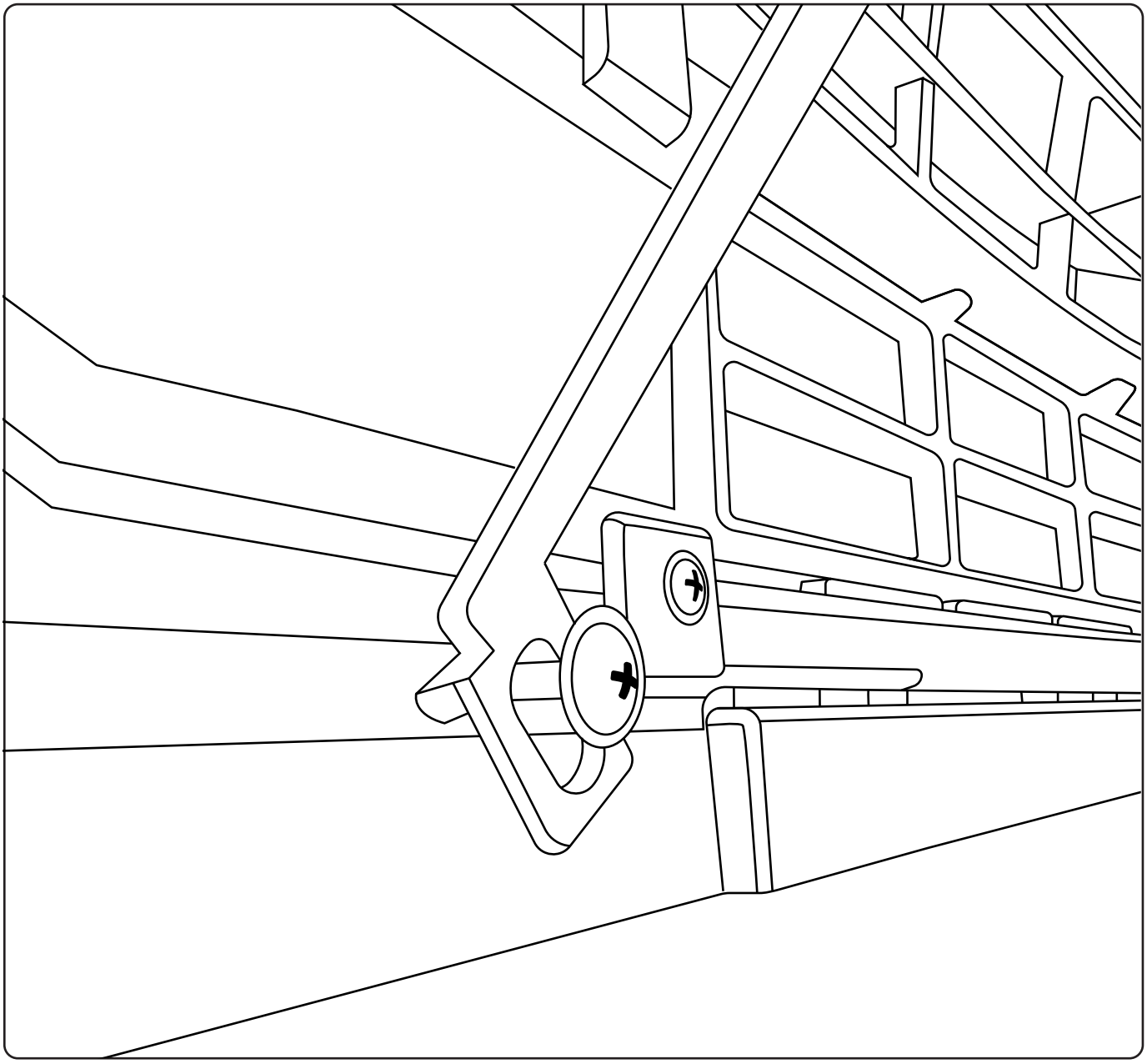

13. Mount the other side of wing support bracket to chassis mount using 1x M10x40mm bolts washers & nuts.

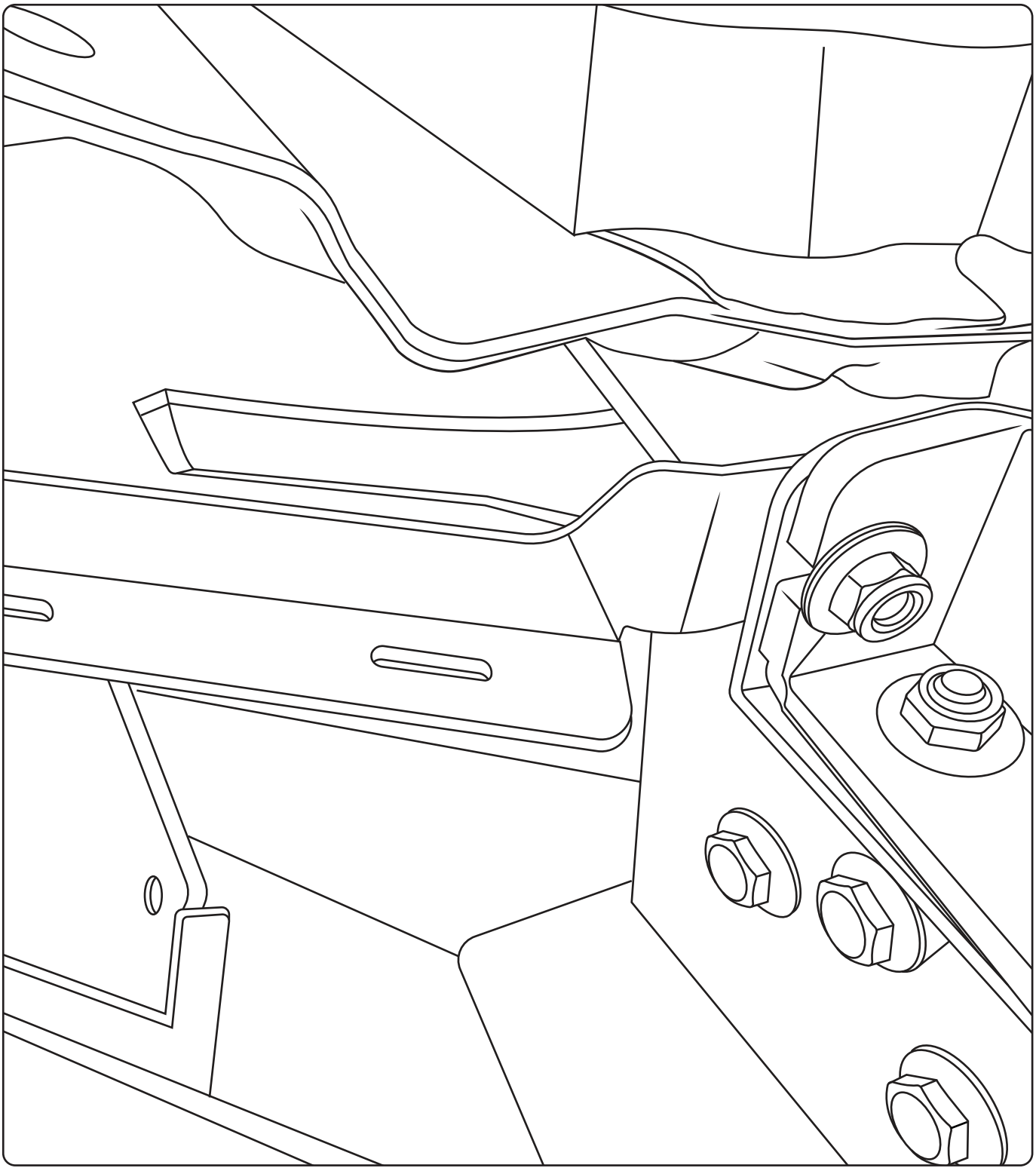

14. Secure the headlight infill panels on each side using two M6 bolts per panel for both Style 1 (Rexton) and Style 2 (Musso).

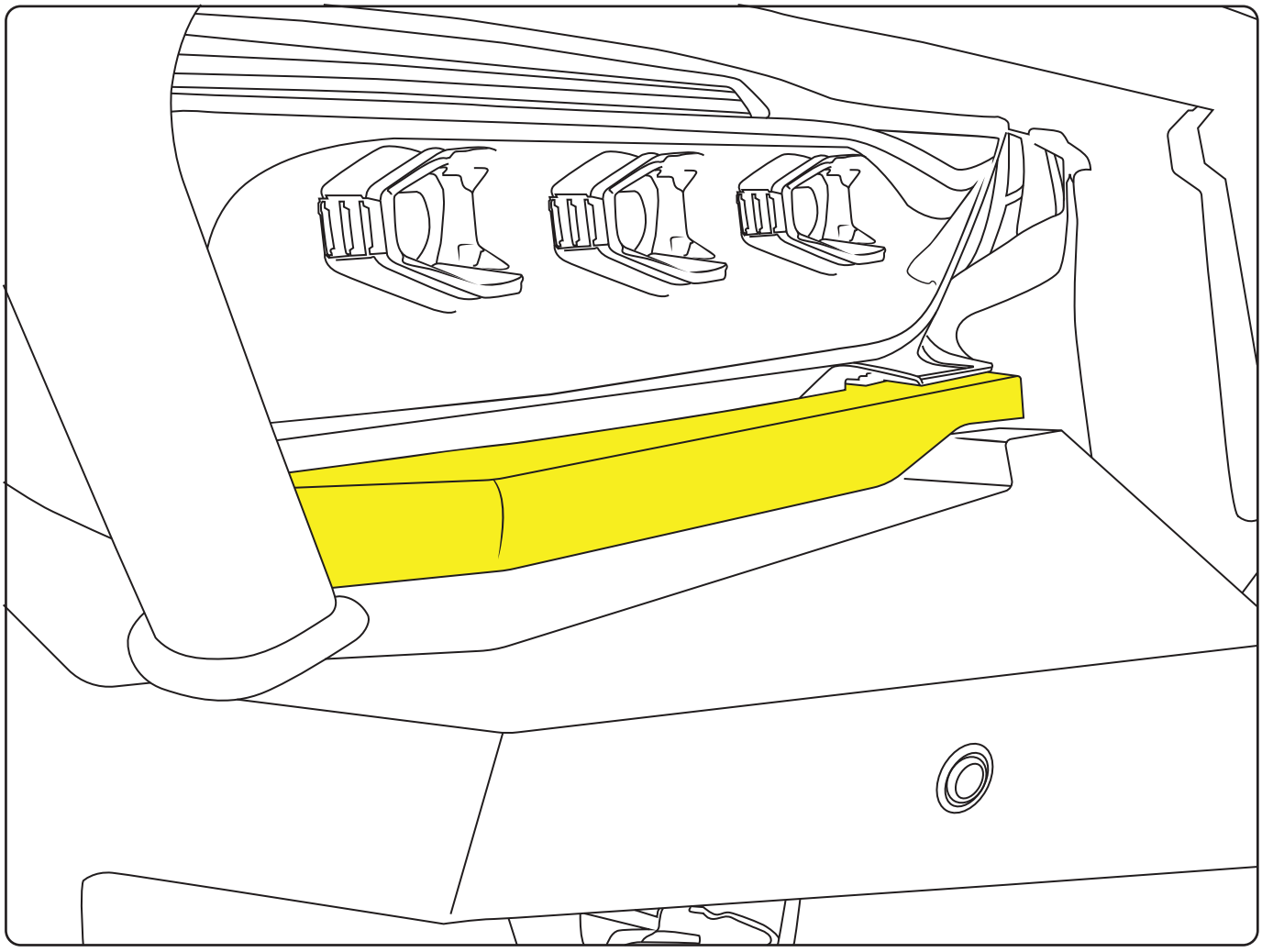

15. Bash Plate Installation (without radar). Please refer to illustration below

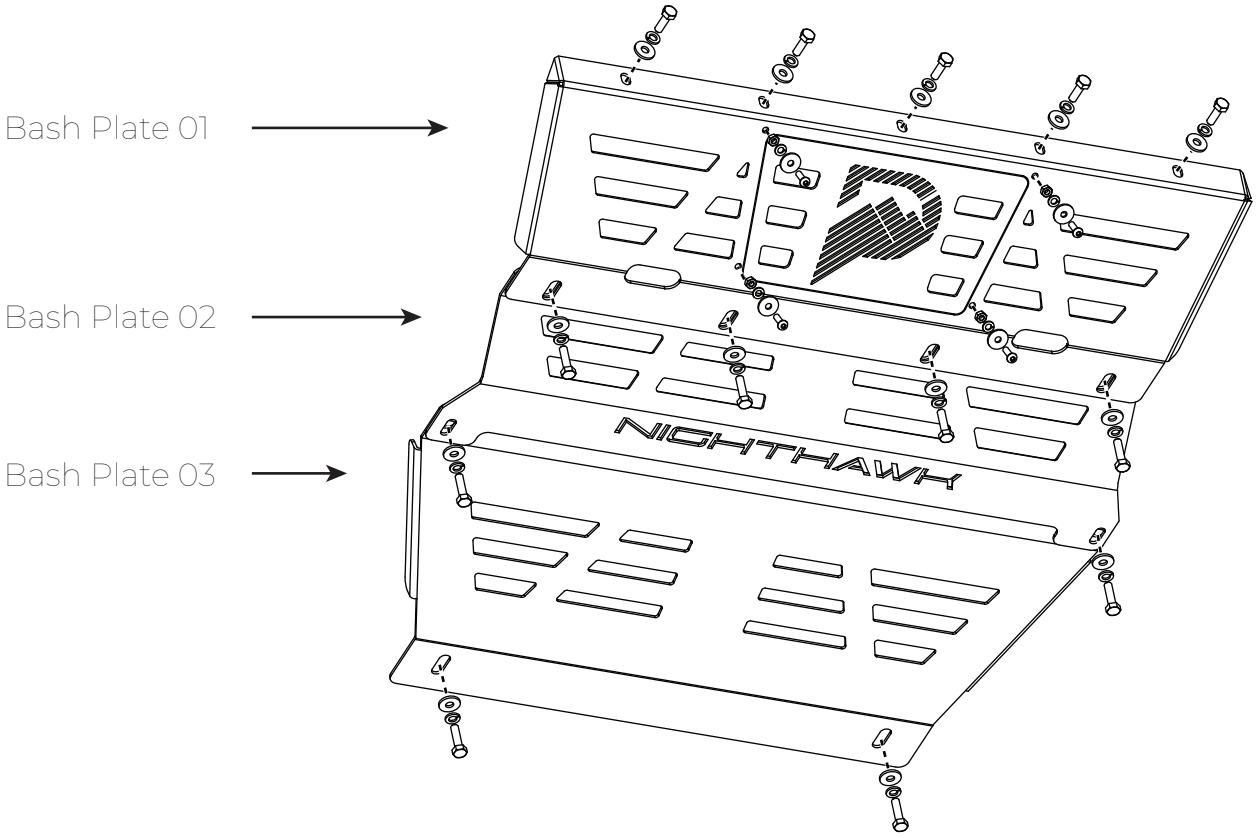

16. For vehicles equipped with a forward-facing radar:

1. Mount the radar onto the winch bed.
2. Install the radar cover box.
3. Remove the front cover plate from Bash Plate 01.
4. Fit Bash Plate 01 over the radar assembly.

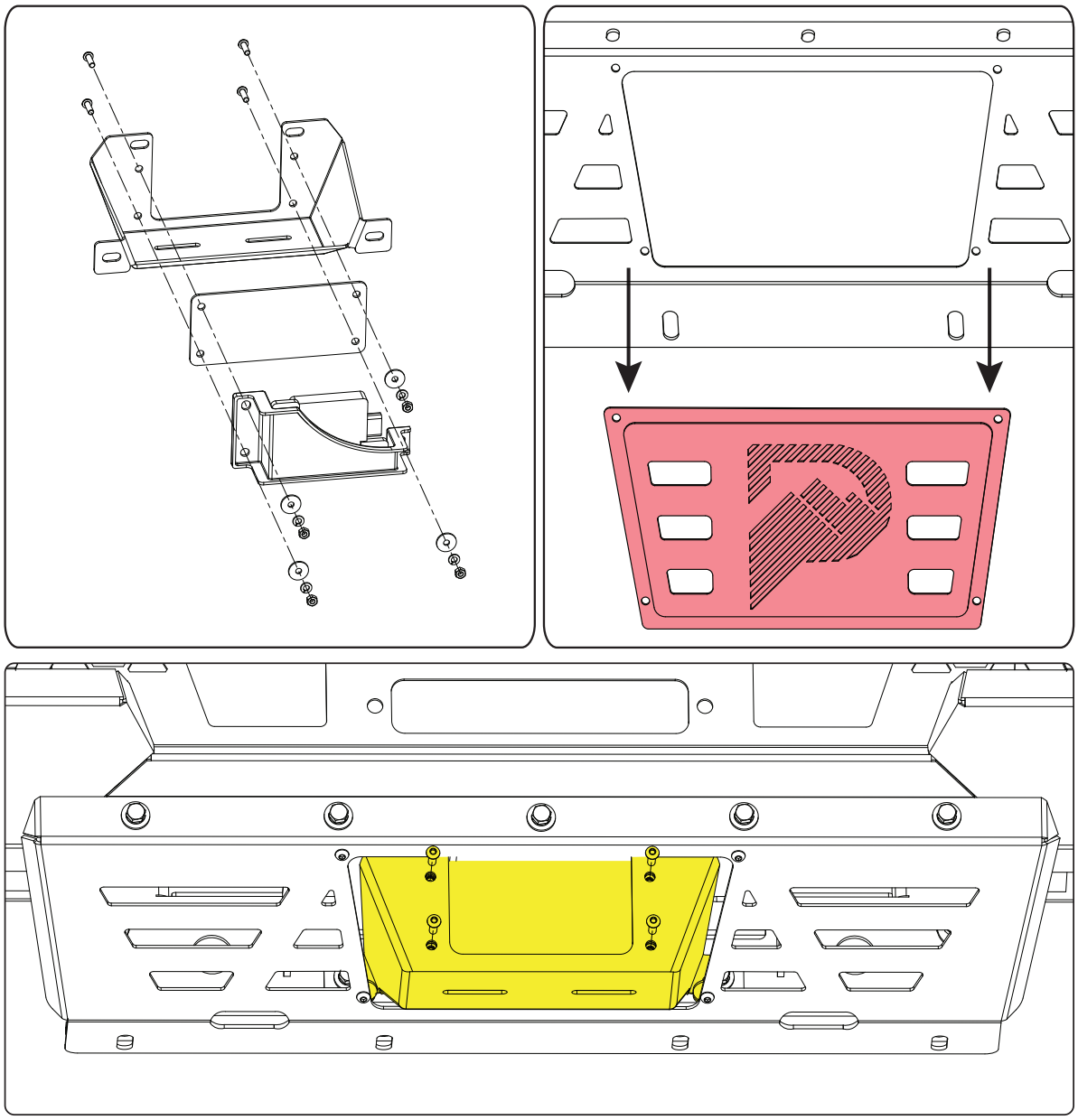

17. Enlist the assistance of another individual to securely fasten the three bash plates, beginning at the rear and progressing forward (Bash Plate 03, Bash Plate 02, Bash Plate 01), utilizing the M8x30mm bolts and washers.

18. Plug in the main harness to body.

19. Plug in the main harness to body (passenger Side) & Plug in camera loom (drivers Side).

20. Trim the inner guards to suit the profile of the bar, rest inner guard up to bar and trace profile on to the plastic and trim with ait hacksaw or snips.

21. Affix top part of number plate bracket using M6 bolts, nuts & washers.

22. Test fog lights and sensors.



R1 Nighthawk by PEAK

www.peak4x4.com.au | info@peak4x4.com.au